Ultrasonic Atomiser Flash MCU

BS45F3833

Revision: V1.10 Date: September 15, 2018

www.holtek.com

Table of Contents

Features 6
CPU Features 6
Peripheral Features 6
General Description 7
Block Diagram 8
Pin Assignment 8
Pin Descriptions 9
Absolute Maximum Ratings 10
D.C. Characteristics 11
A.C. Characteristics 12
4/8/12MHz High Speed Internal Oscillator Frequency Accuracy 13
PTM Dedicated Internal RC Oscillator Frequency Accuracy 13
Slew Rate Control Characteristics 14
LVD & LVR Electrical Characteristics 14
A/D Converter Electrical Characteristics 15
Over Current / Voltage Protection Electrical Characteristics 15
Touch Key Sensor Oscillator Electrical Characteristics 17
Touch Key Oscillator 1MHz mode selected (MSOF[2:0]=100) 17
Touch Key Oscillator 3MHz mode selected (MSOF[2:0]=100) 18
Touch Key Oscillator 7MHz mode selected (MSOF[2:0]=100) 19
Touch Key Oscillator 11MHz mode selected (MSOF[2:0]=100) 20
Power on Reset Electrical Characteristics 20
System Architecture 21
Clocking and Pipelining 21
Program Counter 22
Stack 22
Arithmetic and Logic Unit – ALU 23
Flash Program Memory 24
Structure 24
Special Vectors 24
Look-up Table 24
Table Program Example 25
In Circuit Programming – ICP 26
On-Chip Debug Support – OCDS 27
RAM Data Memory 28
Structure 28
General Purpose Data Memory 28
Special Purpose Data Memory 28

Special Function Register Description 30
Indirect Addressing Registers – IAR0, IAR1 30
Memory Pointers – MP0, MP1 30
Bank Pointer – BP 31
Accumulator – ACC 31
Program Counter Low Register – PCL 31
Look-up Table Registers – TBLP, TBHP, TBLH 31
Status Register – STATUS 32

EEPROM Data Memory 34
EEPROM Data Memory Structure 34
EEPROM Registers 34
Reading Data from the EEPROM 36
Writing Data to the EEPROM 36
Write Protection 36
EEPROM Interrupt 36
Programming Considerations 37

Oscillators 38
Oscillator Overview 38
System Clock Configurations 38
Internal High Speed RC Oscillator – HIRC 39
Internal 32kHz Oscillator – LIRC 39
PTM Dedicated RC Oscillator – PTMOSC 39

Operating Modes and System Clocks 41
System Clocks 41
System Operating Modes 42
Control Registers 43
Operating Mode Switching 45
Standby Current Considerations 49
Wake-up 49

Watchdog Timer 50
Watchdog Timer Clock Source 50
Watchdog Timer Control Register 50
Watchdog Timer Operation 51

Reset and Initialisation 52
Reset Functions 52
Reset Initial Conditions 54

Input/Output Ports 57
Pull-high Resistors 58
Port A Wake-up 58
I/O Port Control Registers 59
Slew Rate Control 60
Source Current Selection 60
Pin-shared Function 61

I/O Pin Structures 64
Programming Considerations 64

Timer Modules – TM 65
Introduction 65
TM Operation 65
TM Clock Source 66
TM Interrupts 66
TM External Pins 66
Programming Considerations 67

Compact Type TM – CTM 69
Compact Type TM Operation 69
Compact Type TM Register Description 69
Compact Type TM Operating Modes 73

Standard Type TM – STM 79
Standard TM Operation 79
Standard Type TM Register Description 79
Standard Type TM Operating Modes 83

Periodic Type TM – PTM 93
Periodic TM Operation 93
Periodic Type TM Register Description 94
Periodic Type TM Operating Modes 97

Analog to Digital Converter 106
A/D Overview 106
A/D Converter Register Description 107
A/D Operation 109
A/D Converter Input Signals 110
Conversion Rate and Timing Diagram 111
Summary of A/D Conversion Steps 111
Programming Considerations 112
A/D Transfer Function 112
A/D Programming Examples 113
Nebuliser Resonance Detector 114
Water Shortage Protection 114

Over Current / Voltage Protection 115
OCVP Operation 115
OCVP Control Registers 116

Touch Key Function 122
Touch Key Structure 122
Touch Key Registers Description 122
Touch Key Operation 127
Touch Key Interrupt 129
Progrsmming Considerations 129

Interrupts **129**
Interrupt Registers 129
Interrupt Operation 134
External Interrupts 136
OCVP Interrupt 136
A/D Converter Interrupt 136
Multi-function Interrupts 137
Time Base Interrupts 137
EEPROM Interrupt 138
LVD Interrupt 138
Touch Key Module Interrupt 139
TM Interrupts 139
Interrupt Wake-up Function 139
Programming Considerations 140
Low Voltage Detector – LVD **141**
LVD Register 141
LVD Operation 142
Configuration Option **142**
Application Circuits **143**
Instruction Set **144**
Introduction 144
Instruction Timing 144
Moving and Transferring Data 144
Arithmetic Operations 144
Logical and Rotate Operation 145
Branches and Control Transfer 145
Bit Operations 145
Table Read Operations 145
Other Operations 145
Instruction Set Summary **146**
Table Conventions 146
Instruction Definition **148**
Package Information **157**
16-pin NSOP (150mil) Outline Dimensions 158
20-pin NSOP (150mil) Outline Dimensions 159

Features

CPU Features

- Operating Voltage
  - f_{SYS} = 4MHz: 2.2V ~ 5.5V
  - f_{SYS} = 8MHz: 2.2V ~ 5.5V
  - f_{SYS} = 12MHz: 2.7V ~ 5.5V
- Up to 0.33μs instruction cycle with 12MHz system clock at V_{DD}=5V
- Power down and wake-up functions to reduce power consumption
- Oscillators
  - Internal High Speed RC – HIRC
  - Internal Low Speed 32kHz RC – LIRC
  - PTM Dedicated 12MHz RC – PTMOSC
- Multi-mode operation: NORMAL, SLOW, IDLE and SLEEP
- Fully integrated oscillators require no external components
- All instructions executed in one or two instruction cycles
- Table read instructions
- 63 powerful instructions
- 4-level subroutine nesting
- Bit manipulation instruction

Peripheral Features

- Flash Program Memory: 2K×16
- RAM Data Memory: 128×8
- True EEPROM Memory: 32×8
- Watchdog Timer function
- 18 bidirectional I/O lines
- Two pin-shared external interrupts
- Slew Rate Control for PB5 Port Output
- Programmable I/O port source current for LED applications
- Multiple Timer Modules for time measure, input capture, compare match output, PWM output function or single pulse output function
  - 10-bit CTM ×3
  - 10-bit STM ×1
  - 10-bit PTM ×1
- Over Current/Voltage Protection (OCVP) Function
- Dual Time-Base functions for generation of fixed time interrupt signals
- 4 external channel 12-bit resolution A/D converter
- 4 touch key functions
- Low voltage reset function
- Low voltage detect function
- Flash program memory can be re-programmed up to 100,000 times

- Flash program memory data retention > 10 years
- True EEPROM data memory can be re-programmed up to 1,000,000 times
- True EEPROM data memory data retention > 10 years
- Package Types: 16-pin NSOP, 20-pin NSOP

General Description

The BS45F3833 is a device dedicated for use in ultrasonic Atomiser applications. The application principle for ultrasonic nebulisers is to use electronic high-frequency oscillation and ceramic nebulising chip high-frequency resonance to break up the liquid water molecules thus generating a fine mist without requiring heating or any chemical substances. Compared with the heating nebulisation method, the ultrasonic method can result in 90% energy savings. Additionally, during the nebulisation process, it can release a large number of negative ions which can precipitate smoke and dust particles in air by electrostatic reaction and also can effectively remove formaldehyde, carbon monoxide, bacteria and other harmful substances thus generating cleaner air and reducing the possibility of disease transmission.

The device is a Flash Memory type 8-bit high performance RISC architecture microcontroller containing special internal circuitry for ultrasonic Atomiser applications and provides full integrated touch key functions which completely eliminating the need for external components. Offering users the convenience of Flash Memory multi-programming features, this device also includes a wide range of functions and features. Other memory includes an area of RAM Data Memory as well as an area of true EEPROM memory for storage of non-volatile data such as serial numbers, calibration data etc. Analog features include a multi-channel 12-bit A/D converter and an over current/voltage protection function. Multiple and extremely flexible Timer Modules provide timing, pulse generation and PWM generation functions. Protective features such as an internal Watchdog Timer, Low Voltage Reset and Low Voltage Detector coupled with excellent noise immunity and ESD protection ensure that reliable operation is maintained in hostile electrical environments.

The device also includes fully integrated low and high speed oscillators which can be flexibly used for different applications. The ability to operate and switch dynamically between a range of operating modes using different clock sources gives users the ability to optimise microcontroller operation and minimise power consumption.

While the inclusion of flexible I/O programming features, Time-Base functions along with an adjustable ultrasonic nebulizer resonant frequency generator and many other features ensure that the device will find excellent use in different ultrasonic nebuliser applications.

This device can use the nebuliser resonance detector to detect the nebuliser resonant frequency and use the nebulise resonant frequency selection to output PFM resonant frequency for nebuliser control, it can also use the water shortage protection and OCVP functions for water shortage detection.

Block Diagram

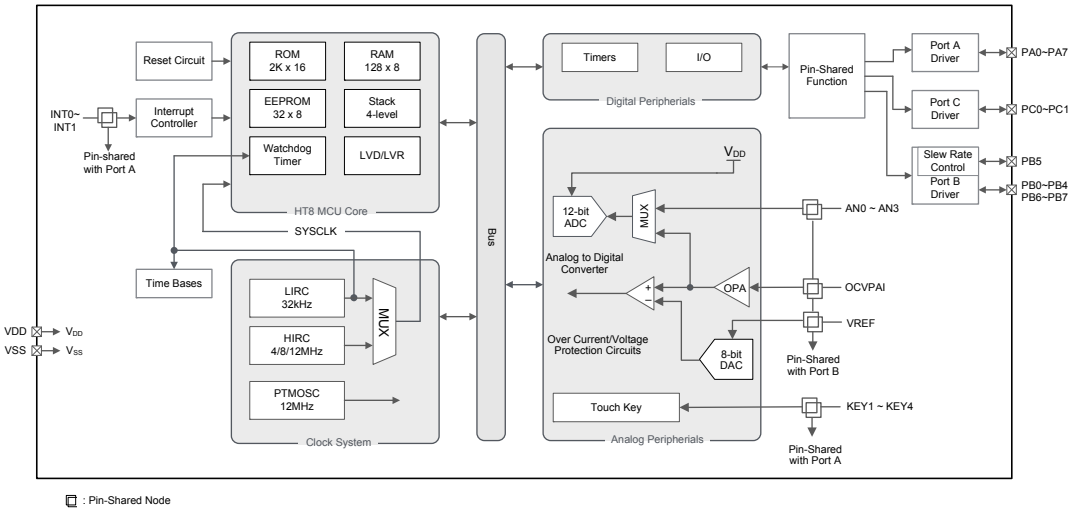

Pin Assignment

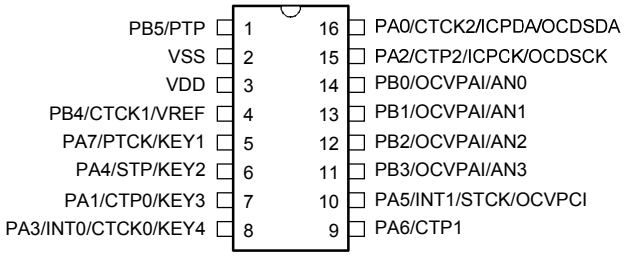

BS45F3833/BS45V3833
16 NSOP-A

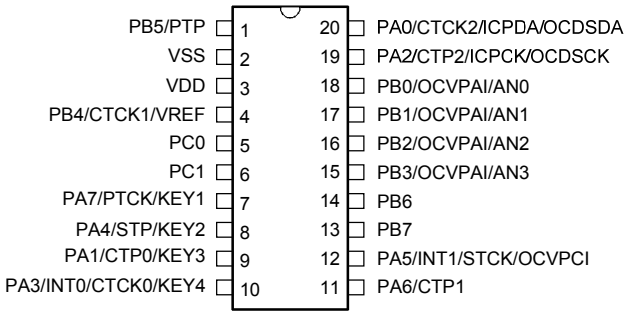

BS45F3833/BS45V3833
20 NSOP-A

Notes: 1. For less pin-count package types there will be unbonded pins which should be properly configured to avoid unwanted current consumption resulting from floating input conditions. Refer to the "Standby Current Considerations" and "Input/Output Ports" sections.
2. If the pin-shared pin functions have multiple output functions, the desired pin-shared function is determined using corresponding pin-shared software control bits.
3. The actual device and its equivalent OCDS EV device share the same package type, however the OCDS EV device part number is BS45V3833. Pins OCDSCK and OCDSDA which are pin-shared with PA2 and PA0 are only used for the OCDS EV device.

Pin Descriptions

Note that the pin description refers to the largest package size, as a result some pins may not exist on smaller package types.

Pin Name	Function	OPT	I/T	O/T	Description
PA0/CTCK2/ ICPDA/OCDSDA	PA0	PAPU PAWU	ST	CMOS	General purpose I/O. Register enabled pull-up and wake-up.
	CTCK2	—	ST	—	CTM2 clock input
	ICPDA	—	ST	CMOS	In-circuit programming data/address pin
	OCDSDA	—	ST	CMOS	On-chip debug support data/address pin, for EV chip only
PA1/CTP0/KEY3	PA1	PAPU PAWU CTRL3	ST	CMOS	General purpose I/O. Register enabled pull-up and wake-up.
	CTP0	CTRL3	—	CMOS	CTM0 output
	KEY3	CTRL3	AN	—	Touch key input
PA2/CTP2/ICPCK/ OCDSCK	PA2	PAPU PAWU	ST	CMOS	General purpose I/O. Register enabled pull-up and wake-up.
	CTP2	CTRL3	—	CMOS	CTM2 output
	ICPCK	—	ST	—	In-circuit programming clock pin
	OCDSCK	—	ST	—	On-chip debug support clock pin, for EV chip only
PA3/INT0/CTCK0 /KEY4	PA3	PAPU PAWU CTRL5	ST	CMOS	General purpose I/O. Register enabled pull-up and wake-up.
	INT0	CTRL5	ST	—	External interrupt 0
	CTCK0	CTRL5	ST	—	CTM0 clock input
	KEY4	CTRL5	AN	—	Touch key input
PA4/STP/KEY2	PA4	PAPU PAWU CTRL3	ST	CMOS	General purpose I/O. Register enabled pull-up and wake-up.
	STP	CTRL3	ST	CMOS	STM output or capture input
	KEY2	CTRL3	AN	—	Touch key input
PA5/INT1/STCK/ OCVPCI	PA5	PAPU PAWU CTRL3	ST	CMOS	General purpose I/O. Register enabled pull-up and wake-up.
	INT1	CTRL3 INTEG	ST	—	External interrupt 1
	STCK	CTRL3	ST	—	STM clock input
	OCVPCI	CTRL3	AN	—	OCVP comparator non-inverting input
PA6/CTP1	PA6	PAPU PAWU CTRL3	ST	CMOS	General purpose I/O. Register enabled pull-up and wake-up.
	CTP1	CTRL3	—	CMOS	CTM1 output
PA7/PTCK/KEY1	PA7	PAPU PAWU CTRL3	ST	CMOS	General purpose I/O. Register enabled pull-up and wake-up.
	PTCK	CTRL3	ST	—	PTM clock input or capture input
	KEY1	CTRL3	AN	—	Touch key input
PB0/OCVPAI0/AN0	PB0	PBPU CTRL4	ST	CMOS	General purpose I/O. Register enabled pull-up
	OCVPAI0	CTRL2 CTRL4	AN	—	OCVPAI0 input path
	AN0	ACERL	AN	—	A/D Converter analog input channel 0

Pin Name	Function	OPT	I/T	O/T	Description
PB1/OCVPAI0/AN1	PB1	PBPU CTRL4	ST	CMOS	General purpose I/O. Register enabled pull-up
	OCVPAI0	CTRL2 CTRL4	AN	—	OCVPAI0 input path
	AN1	ACERL	AN	—	A/D Converter analog input channel 1
PB2/OCVPAI0/AN2	PB2	PBPU CTRL4	ST	CMOS	General purpose I/O. Register enabled pull-up
	OCVPAI0	CTRL2 CTRL4	AN	—	OCVPAI0 input path
	AN2	ACERL	AN	—	A/D Converter analog input channel 2
PB3/OCVPAI0/AN3	PB3	PBPU CTRL4	ST	CMOS	General purpose I/O. Register enabled pull-up
	OCVPAI0	CTRL2 CTRL4	AN	—	OCVPAI0 input path
	AN3	ACERL	AN	—	A/D Converter analog input channel 3
PB4/CTCK1/VREF	PB4	PBPU CTRL5	ST	CMOS	General purpose I/O. Register enabled pull-up
	CTCK1	CTRL5	ST	—	CTM1 clock input
	VREF	CTRL5	AN	—	OCVP D/A Converter reference voltage input
PB5/PTP	PB5	PBPU CTRL5	ST	CMOS	General purpose I/O. Register enabled pull-up
	PTP	CTRL5	ST	CMOS	PTM output or capture input pin
PB6~PB7	PB6~PB7	PBPU	ST	CMOS	General purpose I/O. Register enabled pull-up
PC0~PC1	PC0~PC1	PCPU	ST	CMOS	General purpose I/O. Register enabled pull-up
VDD	VDD	—	PWR	—	Positive power supply
VSS	VSS	—	PWR	—	Negative power supply, ground

Legend: I/T: Input type; O/T: Output type;
OPT: Optional by register option;
PWR: Power; ST: Schmitt Trigger input
CMOS: CMOS output; AN: Analog signal;

Absolute Maximum Ratings

Supply Voltage ..... V_{SS}-0.3V to V_{SS}+6.0V
Input Voltage ..... V_{SS}-0.3V to V_{DD}+0.3V
Storage Temperature ..... -50˚C to 125˚C
Operating Temperature ..... -40˚C to 85˚C
I_{OL} Total 80mA
I_{OH} Total ..... -80mA
Total Power Dissipation 500mW

Note: These are stress ratings only. Stresses exceeding the range specified under "Absolute Maximum Ratings" may cause substantial damage to the device. Functional operation of this device at other conditions beyond those listed in the specification is not implied and prolonged exposure to extreme conditions may affect device reliability.

D.C. Characteristics

Ta = -40°C~85°C

Symbol	Parameter	Test Conditions		Min.	Typ.	Max.	Unit
		V_{DD}	Conditions				
V_{DD}	Operating Voltage (HIRC)	—	$f_{SYS}=f_{HIRC}$=4MHz	2.2	—	5.5	V
			$f_{SYS}=f_{HIRC}$=8MHz	2.2	—	5.5	
			$f_{SYS}=f_{HIRC}$=12MHz	2.7	—	5.5	
	Operating Voltage (LIRC)	—	$f_{SYS}=f_{LIRC}$=32kHz	2.2	—	5.5	V
I_{DD}	Operating Current (HIRC)	3V	No load, all peripherals off, $f_{SYS}=f_{HIRC}$=4MHz	—	2.2	3.3	mA
		5V		—	5	7.5	
		3V	No load, all peripherals off, $f_{SYS}=f_{HIRC}$=8MHz	—	2.2	3.3	
		5V		—	5	7.5	
		3V	No load, all peripherals off, $f_{SYS}=f_{HIRC}$=12MHz	—	2.2	3.3	
		5V		—	5	7.5	
	Operating Current (LIRC)	3V	No load, all peripherals off, $f_{SYS}=f_{LIRC}$=32kHz	—	10	20	μA
		5V		—	30	50	
I_{STB}	Standby Current (SLEEP0 Mode)	3V	No load, all peripherals off, WDT off	—	0.2	0.8	μA
		5V		—	0.5	1	
	Standby Current (SLEEP1 Mode)	3V	No load, all peripherals off, WDT on	—	1.3	5	μA
		5V		—	2.2	10	
	Standby Current (IDLE0 Mode)	3V	No load, all peripherals off, f_{SUB} on	—	1.3	3	μA
		5V		—	2.2	5	
	Standby Current (IDLE1 Mode, HIRC)	3V	No load, all peripherals off, f_{SUB} on, $f_{SYS}=f_{HIRC}$=12MHz	—	0.6	1.2	mA
		5V		—	1.2	2.4	
V_{IL}	Input Low Voltage for I/O Ports	5V	—	0	—	1.5	V
		—	—	0	—	$0.2V_{DD}$	
V_{IH}	Input High Voltage for I/O Ports	5V	—	3.5	—	5	V
		—	—	$0.8V_{DD}$	—	V_{DD}	
I_{OL}	Sink Current for I/O Ports (Except PB5 Port)	3V	$V_{OL}=0.1V_{DD}$	16	32	—	mA
		5V		32	65	—	
I_{OH}	Source Current for I/O Ports (Except PB5 Port)	3V	$V_{OH}=0.9V_{DD}$ SLEDCn[m+1, m]=00B n=0, 1; m=0, 2, 4, 6	-0.7	-1.5	—	mA
		5V		-1.5	-2.9	—	
		3V	$V_{OH}=0.9V_{DD}$ SLEDCn[m+1, m]=01B n=0, 1; m=0, 2, 4, 6	-1.3	-2.5	—	mA
		5V		-2.5	-5.1	—	
		3V	$V_{OH}=0.9V_{DD}$ SLEDCn[m+1, m]=10B n=0, 1; m=0, 2, 4, 6	-1.8	-3.6	—	mA
		5V		-3.6	-7.3	—	
		3V	$V_{OH}=0.9V_{DD}$ SLEDCn[m+1, m]=11B n=0, 1; m=0, 2, 4, 6	-4	-8	—	mA
		5V		-8	-16	—	
R_{PH}	Pull-high Resistance for I/O Ports	3V	—	20	60	100	kΩ
		5V		10	30	50	

A.C. Characteristics

Ta=-40°C~85°C

Symbol	Parameter	Test Conditions		Min.	Typ.	Max.	Unit
		V_{DD}	Conditions				
f_{SYS}	System Clock (HIRC)	2.2V~5.5V	$f_{SYS}=f_{HIRC}$=4MHz	—	4	—	MHz
		2.2V~5.5V	$f_{SYS}=f_{HIRC}$=8MHz	—	8	—	
		2.7V~5.5V	$f_{SYS}=f_{HIRC}$=12MHz	—	12	—	
	System Clock (LIRC)	2.2V~5.5V	$f_{SYS}=f_{LIRC}$=32kHz	—	32	—	kHz
f_{LIRC}	Low Speed Internal RC Oscillator (LIRC)	3V	Ta=25°C	-10%	32	+10%	kHz
		5V	Ta=25°C	-10%	32	+10%	
		3V±0.3V	Ta=-40°C~85°C	-40%	32	+40%	
		5V± 0.5V	Ta=-40°C~85°C	-40%	32	+40%	
		2.2V~5.5V	Ta=-40°C~85°C	-50%	32	+60%	
t_{TIMER}	xTCKn Input Pin Minimum Pulse Width	—	—	—	150	—	ns
t_{DEW}	Data EEPROM Write Time	—	—	—	2	4	ms
t_{INT}	External Interrupt Minimum Pulse Width	—	—	10	—	—	μs
t_{RSTD}	System Reset Delay Time (Power-on Reset, LVR Hardware Reset, LVRC/ WDTC Register Software Reset)	—	—	25	50	100	ms
	System reset delay time (WDT Time-out Hardware Cold Reset)	—	—	8.3	16.7	33.3	ms
t_{SST}	System Start-up Timer Period (Wake-up from condition where f_{SYS} is off)	—	$f_{SYS}=f_H$~f_H/64, $f_H=f_{HIRC}$	16	—	—	t_{HIRC}
		—	$f_{SYS}=f_{SUB}=f_{LIRC}$	2	—	—	t_{LIRC}
	System Start-up Timer Period (Slow Mode ↔ Normal Mode)	—	f_{HIRC} off → on (HTO=1)	16	—	—	t_{HIRC}
	System Start-up Timer Period (Wake-up from condition where f_{SYS} is on)	—	$f_{SYS}=f_{HIRC}$~f_{HIRC}/64	2	—	—	t_H
		—	$f_{SYS}=f_{LIRC}$	2	—	—	t_{SUB}
	System Start-up Timer Period (WDT Time-out Hardware Cold Reset)	—	—	0	—	—	t_H

Note: $t_{SYS}=1/f_{SYS}$; $t_{SUB}=1/f_{SUB}$; $t_{HIRC}=1/f_{HIRC}$

4/8/12MHz High Speed Internal Oscillator Frequency Accuracy

During the program writing operation the writer will trim the HIRC oscillator at a user selected HIRC frequency and user selected voltage of either 3V or 5V.

Symbol	Parameter	Test Conditions		Min.	Typ.	Max.	Unit
		V_{DD}	Temp.				
f_{HIRC}	4MHz Writer Trimmed HIRC Frequency	3V/5V	25°C	-1%	4	+1%	MHz
			-40°C ~ 85°C	-2%	4	+2%	
		2.2V~5.5V	25°C	-2.5%	4	+2.5%	
			-40°C ~ 85°C	-3%	4	+3%	
f_{HIRC}	8MHz Writer Trimmed HIRC Frequency	3V/5V	25°C	-1%	8	+1%	MHz
			-40°C ~ 85°C	-2%	8	+2%	
		2.2V~5.5V	25°C	-2.5%	8	+2.5%	
			-40°C ~ 85°C	-3%	8	-3%	
f_{HIRC}	12MHz Writer Trimmed HIRC Frequency	5V	25°C	-1%	12	+1%	MHz
			-40°C ~ 85°C	-2%	12	+2%	
		2.7V~5.5V	25°C	-2.5%	12	+2.5%	
			-40°C ~ 85°C	-3%	12	+3%	

Notes: 1. The 3V/5V values for V_{DD} are provided as these are the two selectable fixed voltages at which the HIRC frequency is trimmed by the writer.
2. The row below the 3V/5V or 5V trim voltage row is provided to show the values for the full V_{DD} range operating voltage. It is recommended that the trim voltage is fixed at 3V for application voltage ranges from 2.2V to 3.6V and fixed at 5V for application voltage ranges from 3.3V to 5.5V.

PTM Dedicated Internal RC Oscillator Frequency Accuracy

This 12MHz internal RC oscillator is dedicated for providing clocks for the PTM.The writer trim the 12MHz oscillator at conditions of V_{DD} is 3V or 5V and FADJH value is 01H, FADJL value is 00H.

Symbol	Parameter	Test Conditions		Min.	Typ.	Max.	Unit
		V_{DD}	Temp.				
f_{PTM}	12MHz Writer Trimmed HIRC Frequency	3V	25°C	-2%	12	+2%	MHz
			0°C ~ 70°C	-7%	12	+7%	
			-40°C ~ 85°C	-10%	12	+10%	
		5V	25°C	-2%	12	+2%	
			0°C ~ 70°C	-7%	12	+7%	
			-40°C ~ 85°C	-7%	12	+7%	
		2.7V~ 5.5V	25°C	-5%	12	+5%	
			0°C ~ 70°C	-7%	12	+7%	
			-40°C ~ 85°C	-10%	12	+10%	

Slew Rate Control Characteristics

Ta=-40°C~85°C

Symbol	Parameter	Test Conditions		Min.	Typ.	Max.	Unit
		V_{DD}	Conditions				
I_{OL}	Sink Current for I/O Port with Slew Rate Control (PB5 Port)	3V	V_{OL}=0.2V_{DD}	24	60	—	mA
		5V		60	150	—	
I_{OH}	Source Current for I/O Port with Slew Rate Control (PB5 Port)	3V	V_{OH}=0.8V_{DD}	-24	-60	—	mA
		5V		-60	-150	—	
SR_{RISE}	Output Rising Edge Slew Rate for I/O Ports (PB5 Port)	5V	SLEWC0[1:0]=00B 0.5V to 4.5V, C_{LOAD}=1000pF	200	—	—	V/μs
		5V	SLEWC0[1:0]=01B 0.5V to 4.5V, C_{LOAD}=1000pF	—	120	—	V/μs
		5V	SLEWC0[1:0]=10B 0.5V to 4.5V, C_{LOAD}=1000pF	—	60	—	V/μs
		5V	SLEWC0[1:0]=11B 0.5V to 4.5V, C_{LOAD}=1000pF	—	45	—	V/μs
SR_{FALL}	Output Falling Edge Slew Rate for I/O Ports (PB5 Port)	5V	SLEWC0[1:0]=00B 4.5V to 0.5V, C_{LOAD}=1000pF	200	—	—	V/μs
		5V	SLEWC0[1:0]=01B 4.5V to 0.5V, C_{LOAD}=1000pF	—	120	—	V/μs
		5V	SLEWC0[1:0]=10B 4.5V to 0.5V, C_{LOAD}=1000pF	—	60	—	V/μs
		5V	SLEWC0[1:0]=11B 4.5V to 0.5V, C_{LOAD}=1000pF	—	45	—	V/μs

LVD & LVR Electrical Characteristics

Ta=-40°C~85°C

Symbol	Parameter	Test Conditions		Min.	Typ.	Max.	Unit
		V_{DD}	Conditions				
V_{LVR}	Low Voltage Reset Voltage	—	LVR enable, 2.1V	-5%	2.10	+5%	V
			LVR enable, 2.55V		2.55		
			LVR enable, 3.15V		3.15		
			LVR enable, 3.8V		3.80		
V_{LVD}	Low Voltage Detector Voltage	—	LVDEN=1, V_{LVD}=2.0V	-5%	2.0	+5%	V
			LVDEN=1, V_{LVD}=2.2V		2.2		
			LVDEN=1, V_{LVD}=2.4V		2.4		
			LVDEN=1, V_{LVD}=2.7V		2.7		
			LVDEN=1, V_{LVD}=3.0V		3.0		
			LVDEN=1, V_{LVD}=3.3V		3.3		
			LVDEN=1, V_{LVD}=3.6V		3.6		
			LVDEN=1, V_{LVD}=4.0V		4.0		
I_{LVR}	Additional Current for LVR Enable	5V±3%	LVR Disable → Enable	—	60	90	μA
I_{LVD}	Additional Current for LVD Enable	5V±3%	LVD Disable → LVD Enable (LVR Disabled)	—	75	115	μA
			LVD Disable → LVD Enable (LVR Enabled)	—	60	90	μA
t_{LVR}	LVR Minimum Low Voltage Width to Reset	—	—	120	240	480	μs
t_{LVD}	LVD Minimum Low Voltage Width to Interrupt	—	—	60	120	240	μs

Symbol	Parameter	Test Conditions		Min.	Typ.	Max.	Unit
		V_{DD}	Conditions				
t_{LVDS}	LVDO Stable Time	—	For LVR enable, LVD off → on	—	—	15	μs
		—	For LVR disable, LVD off → on	—	—	150	μs
t_{SRESET}	Software Reset Width to Reset	—	—	45	90	120	μs

Note: V_{LVR} or V_{LVD} is the voltage level under which a LVR reset or LVD interrupt occurs.

A/D Converter Electrical Characteristics

Ta=-40°C~85°C

Symbol	Parameter	Test Conditions		Min.	Typ.	Max.	Unit
		V_{DD}	Conditions				
V_{DD}	Operating Voltage	—	—	2.7	5	5.5	V
V_{ADI}	Input Voltage	—	—	0	—	V_{REF}	V
V_{REF}	Reference Voltage	—	—	2.0	—	V_{DD}	V
DNL	Differential Non-linearity	3V	V_{REF}=V_{DD}, t_{ADCK}=0.5μs or 10μs	-3	—	+5	LSB
		5V					
INL	Integral Non-linearity	3V	V_{REF}=V_{DD}, t_{ADCK}=0.5μs or 10μs	-5	—	+6	LSB
		5V					
I_{ADC}	Additional Current for A/D Converter Enable	3V	No load, t_{ADCK}=0.5μs	—	0.9	1.35	mA
		5V		—	1.2	1.8	mA
t_{ADCK}	A/D Converter Clock Period	—	—	0.5	—	10	μs
t_{ON2ST}	A/D Converter On-to-Start Time	—	—	4	—	—	μs
t_{ADC}	A/D Conversion Time (Include A/D Sample and Hold Time)	—	12-bit ADC	—	16	—	t_{ADCK}

Over Current / Voltage Protection Electrical Characteristics

Ta=-40°C~85°C

Symbol	Parameter	Test Conditions		Min.	Typ.	Max.	Unit
		V_{DD}	Conditions				
I_{OCVP}	Operating Current	3V	DAC V_{REF}=2.5V	—	—	1250	μA
		5V		—	730	1250	
V_{OS_CMP}	Comparator Input Offset Voltage	3V	Without calibration (OCVPCOF[4:0]=10000B)	-15	—	15	mV
		5V		-15	—	15	
		3V	With calibration	-4	—	4	mV
		5V		-4	—	4	
V_{HYS}	Hysteresis	3V	—	20	40	60	mV
		5V	—	20	40	60	
V_{CM_CMP}	Comparator Common Mode Voltage Range	3V	—	V_{SS}	—	V_{DD} - 1.4	V
		5V	—	V_{SS}	—	V_{DD} - 1.4	
V_{OS_OPA}	OPAMP Input Offset Voltage	3V	Without calibration (OCVPOOF[5:0]=100000B)	-15	—	15	mV
		5V		-15	—	15	
		3V	With calibration	-4	—	4	mV
		5V		-4	—	4	
V_{CM_OPA}	OPAMP Common Mode Voltage Range	3V	—	V_{SS}	—	V_{DD} - 1.4	V
		5V	—	V_{SS}	—	V_{DD} - 1.4	

Symbol	Parameter	Test Conditions		Min.	Typ.	Max.	Unit
		V_{DD}	Conditions				
V_{OR}	OPAMP Maximum Output Voltage Range	3V	—	V_{SS} + 0.1	—	V_{DD} - 0.1	V
		5V	—	V_{SS} + 0.1	—	V_{DD} - 0.1	
Ga	PGA Gain Accuracy	3V/5V	In non-inverting mode, R2/R1 ≤ 50, using internal resistor, and input voltage > 80mV	-5	—	5	%
			In non-inverting mode, R2/R1=65 or 80 , using internal resistor, and input voltage > 50mV	-8	—	8	%
			In non-inverting mode, R2/R1=130, using internal resistor, and input voltage > 35mV	-10	—	10	%
			In inverting mode, R2/R1≤ 50, using internal resistor, and -300mV< input voltage < -80mV	-5	—	5	%
			In inverting mode, R2/R1=65 or 80 , using internal resistor, and -300mV< input voltage < -50mV	-8	—	8	%
			In inverting mode, R2/R1=130, using internal resistor, and -300mV< input voltage < -35mV	-10	—	10	%
DNL	Differential Non-linearity	3V	DAC V_{REF}=V_{DD}	—	—	±2	LSB
		5V		—	—	±1	LSB
INL	Integral Non-linearity	3V	DAC V_{REF}=V_{DD}	—	—	±2	LSB
		5V		—	—	±1.5	LSB

Touch Key Sensor Oscillator Electrical Characteristics

Touch Key Oscillator 1MHz mode selected (MSOF[2:0]=100)

Ta=-40°C~85°C

Symbol	Parameter	Test Conditions		Min.	Typ.	Max.	Unit
		V_{DD}	Conditions				
I_{KEYOSC}	Only Sensor (KEY) Oscillator Operating Current	3V	*f_{SENOSC}=1MHz, MFILEN=0	—	60	120	μA
		5V		—	130	260	
		3V	*f_{SENOSC}=1MHz, MFILEN=1	—	80	160	μA
		5V		—	150	300	
I_{REFOSC}	Only Reference Oscillator Operating Current	3V	*f_{REFOSC}=1MHz, MTSS=0, MFILEN=0	—	60	120	μA
		5V		—	130	260	
		3V	*f_{REFOSC}=1MHz, MTSS=0, MFILEN=1	—	60	120	μA
		5V		—	130	260	
		3V	*f_{REFOSC}=1MHz, MTSS=1, MFILEN=0	—	60	120	μA
		5V		—	130	260	
		3V	*f_{REFOSC}=1MHz, MTSS=1, MFILEN=1	—	80	160	μA
		5V		—	200	400	
C_{KEYOSC}	Sensor (KEY) Oscillator External Capacitor	3V	*f_{SENOSC}=0.75MHz	1	10	30	pF
		5V	*f_{SENOSC}=1MHz	1	10	30	pF
C_{REFOSC}	Reference Oscillator Internal Capacitor	3V	*f_{REFOSC}=0.75MHz	1	10	30	pF
		5V	*f_{REFOSC}=1MHz	1	10	30	pF
f_{KEYOSC}	Sensor (KEY) Oscillator Operating Frequency	5V	*C_{EXT}=1, 2, 3, 4, 5, 6, 7, …, 50pF	0.15	1	2	MHz
f_{REFOSC}	Reference Oscillator Operating Frequency	5V	*C_{INT}=1, 2, 3, 4, 5, 6, 7, …, 50pF	0.15	1	2	MHz

Note: *f_{SENOSC}=1MHz: Adjust KEYn external capacitor to make sure that the Sensor oscillator frequency is equal to1MHz.

*f_{REFOSC}=1MHz: Adjust Reference oscillator internal capacitor to make sure that the reference oscillator frequency is equal to 1MHz.

Touch Key Oscillator 3MHz mode selected (MSOF[2:0]=100)

Ta=-40°C~85°C

Symbol	Parameter	Test Conditions		Min.	Typ.	Max.	Unit
		V_{DD}	Conditions				
I_{KEYOSC}	Only Sensor (KEY) Oscillator Operating Current	3V	*f_{SENOSC}=3MHz, MFILEN=0	—	130	260	μA
		5V		—	260	520	
		3V	*f_{SENOSC}=3MHz, MFILEN=1	—	150	300	μA
		5V		—	280	560	
I_{REFOSC}	Only Reference Oscillator Operating Current	3V	*f_{REFOSC}=3MHz, MTSS=0, MFILEN=0	—	130	260	μA
		5V		—	260	520	
		3V	*f_{REFOSC}=3MHz, MTSS=0, MFILEN=1	—	130	260	μA
		5V		—	260	520	
		3V	*f_{REFOSC}=3MHz, MTSS=1, MFILEN=0	—	130	260	μA
		5V		—	260	520	
		3V	*f_{REFOSC}=3MHz, MTSS=1, MFILEN=1	—	150	300	μA
		5V		—	375	750	
C_{KEYOSC}	Sensor (KEY) Oscillator External Capacitor	3V	*f_{SENOSC}=2MHz	1	10	30	pF
		5V	*f_{SENOSC}=3MHz	1	10	30	pF
C_{REFOSC}	Reference Oscillator Internal Capacitor	3V	*f_{REFOSC}=2MHz	1	10	30	pF
		5V	*f_{REFOSC}=3MHz	1	10	30	pF
f_{KEYOSC}	Sensor (KEY) Oscillator Operating Frequency	5V	*C_{EXT}=1, 2, 3, 4, 5, 6, 7, …, 50pF	0.15	3	6	MHz
f_{REFOSC}	Reference Oscillator Operating Frequency	5V	*C_{INT}=1, 2, 3, 4, 5, 6, 7, …, 50pF	0.15	3	6	MHz

Note: *f_{SENOSC}=3MHz: Adjust KEYn external capacitor to make sure that the Sensor oscillator frequency is equal to 3MHz.

*f_{REFOSC}=3MHz: Adjust Reference oscillator internal capacitor to make sure that the reference oscillator frequency is equal to 3MHz.

Touch Key Oscillator 7MHz mode selected (MSOF[2:0]=100)

Ta=-40°C~85°C

Symbol	Parameter	Test Conditions		Min.	Typ.	Max.	Unit
		V_{DD}	Conditions				
I_{KEYOSC}	Only Sensor (KEY) Oscillator Operating Current	3V	*f_{SENOSC}=**7**MHz, MFILEN=0	—	280	560	μA
		5V		—	630	1260	
		3V	*f_{SENOSC}=**7**MHz, MFILEN=1	—	300	600	μA
		5V		—	650	1300	
I_{REFOSC}	Only Reference Oscillator Operating Current	3V	*f_{REFOSC}=**7**MHz, MTSS=0, MFILEN=0	—	280	560	μA
		5V		—	630	1260	
		3V	*f_{REFOSC}=**7**MHz, MTSS=0, MFILEN=1	—	280	560	μA
		5V		—	630	1260	
		3V	*f_{REFOSC}=**7**MHz, MTSS=1, MFILEN=0	—	280	560	μA
		5V		—	630	1260	
		3V	*f_{REFOSC}=**7**MHz, MTSS=1, MFILEN=1	—	300	600	μA
		5V		—	750	1500	
C_{KEYOSC}	Sensor (KEY) Oscillator External Capacitor	3V	*f_{SENOSC}=**4.5**MHz	1	10	30	pF
		5V	*f_{SENOSC}=7MHz	1	10	30	pF
C_{REFOSC}	Reference Oscillator Internal Capacitor	3V	*f_{REFOSC}=**4.5**MHz	1	10	30	pF
		5V	*f_{REFOSC}=**7**MHz	1	10	30	pF
f_{KEYOSC}	Sensor (KEY) Oscillator Operating Frequency	5V	*C_{EXT}=1, 2, 3, 4, 5, 6, 7, …, 50pF	0.15	7	14	MHz
f_{REFOSC}	Reference Oscillator Operating Frequency	5V	*C_{INT}=1, 2, 3, 4, 5, 6, 7, …, 50pF	0.15	7	14	MHz

Note: *f_{SENOSC}=7MHz: Adjust KEYn external capacitor to make sure that the Sensor oscillator frequency is equal to 7MHz.

*f_{REFOSC}=7MHz: Adjust Reference oscillator internal capacitor to make sure that the reference oscillator frequency is equal to 7MHz.

Touch Key Oscillator 11MHz mode selected (MSOF[2:0]=100)

Ta=-40°C~85°C

Symbol	Parameter	Test Conditions		Min.	Typ.	Max.	Unit
		V_{DD}	Conditions				
I_{KEYOSC}	Only Sensor (KEY) Oscillator Operating Current	3V	*f_{SENOSC}=11MHz, MFILEN=0	—	280	560	μA
		5V		—	630	1260	
		3V	*f_{SENOSC}=11MHz, MFILEN=1	—	300	600	μA
		5V		—	650	1300	
I_{REFOSC}	Only Reference Oscillator Operating Current	3V	*f_{REFOSC}=11MHz, MTSS=0, MFILEN=0	—	280	560	μA
		5V		—	630	1260	
		3V	*f_{REFOSC}=11MHz, MTSS=0, MFILEN=1	—	280	560	μA
		5V		—	630	1260	
		3V	*f_{REFOSC}=11MHz, MTSS=1, MFILEN=0	—	280	560	μA
		5V		—	630	1260	
		3V	*f_{REFOSC}=11MHz, MTSS=1, MFILEN=1	—	300	600	μA
		5V		—	750	1500	
C_{KEYOSC}	Sensor (KEY) Oscillator External Capacitor	3V	*f_{SENOSC}=7.8MHz	1	10	30	pF
		5V	*f_{SENOSC}=11MHz	1	10	30	pF
C_{REFOSC}	Reference Oscillator Internal Capacitor	3V	*f_{REFOSC}=7.8MHz	1	10	30	pF
		5V	*f_{REFOSC}=11MHz	1	10	30	pF
f_{KEYOSC}	Sensor (KEY) Oscillator Operating Frequency	5V	*C_{EXT}=1, 2, 3, 4, 5, 6, 7, …, 50pF	0.15	11	27	MHz
f_{REFOSC}	Reference Oscillator Operating Frequency	5V	*C_{INT}=1, 2, 3, 4, 5, 6, 7, …, 50pF	0.15	11	27	MHz

Note: *f_{SENOSC}=11MHz: Adjust KEYn external capacitor to make sure that the Sensor oscillator frequency is equal to 11MHz.

*f_{REFOSC}=11MHz: Adjust Reference oscillator internal capacitor to make sure that the reference oscillator frequency is equal to 11MHz.

Power on Reset Electrical Characteristics

Ta=25°C

Symbol	Parameter	Test Conditions		Min.	Typ.	Max.	Unit
		V_{DD}	Conditions				
V_{POR}	V_{DD} Start Voltage to Ensure Power-on Reset	—	—	—	—	100	mV
RR_{POR}	V_{DD} Rising Rate to Ensure Power-on Reset	—	—	0.035	—	—	V/ms
t_{POR}	Minimum Time for V_{DD} Stays at V_{POR} to Ensure Power-on Reset	—	—	1	—	—	ms

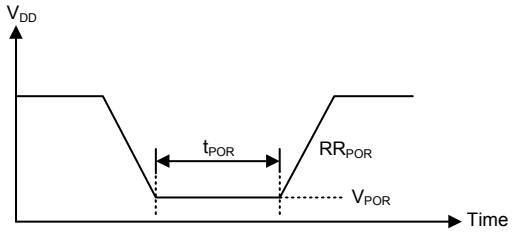

System Architecture

A key factor in the high-performance features of the Holtek range of microcontrollers is attributed to their internal system architecture. The device takes advantage of the usual features found within RISC microcontrollers providing increased speed of operation and Periodic performance. The pipelining scheme is implemented in such a way that instruction fetching and instruction execution are overlapped, hence instructions are effectively executed in one cycle, with the exception of branch or call instructions. An 8-bit wide ALU is used in practically all instruction set operations, which carries out arithmetic operations, logic operations, rotation, increment, decrement, branch decisions, etc. The internal data path is simplified by moving data through the Accumulator and the ALU. Certain internal registers are implemented in the Data Memory and can be directly or indirectly addressed. The simple addressing methods of these registers along with additional architectural features ensure that a minimum of external components is required to provide a functional I/O and A/D control system with maximum reliability and flexibility. This makes the device suitable for low-cost, high-volume production for controller applications.

Clocking and Pipelining

The main system clock, derived from either an HIRC or LIRC oscillator is subdivided into four internally generated non-overlapping clocks, T1~T4. The Program Counter is incremented at the beginning of the T1 clock during which time a new instruction is fetched. The remaining T2~T4 clocks carry out the decoding and execution functions. In this way, one T1~T4 clock cycle forms one instruction cycle. Although the fetching and execution of instructions takes place in consecutive instruction cycles, the pipelining structure of the microcontroller ensures that instructions are effectively executed in one instruction cycle. The exception to this are instructions where the contents of the Program Counter are changed, such as subroutine calls or jumps, in which case the instruction will take one more instruction cycle to execute.

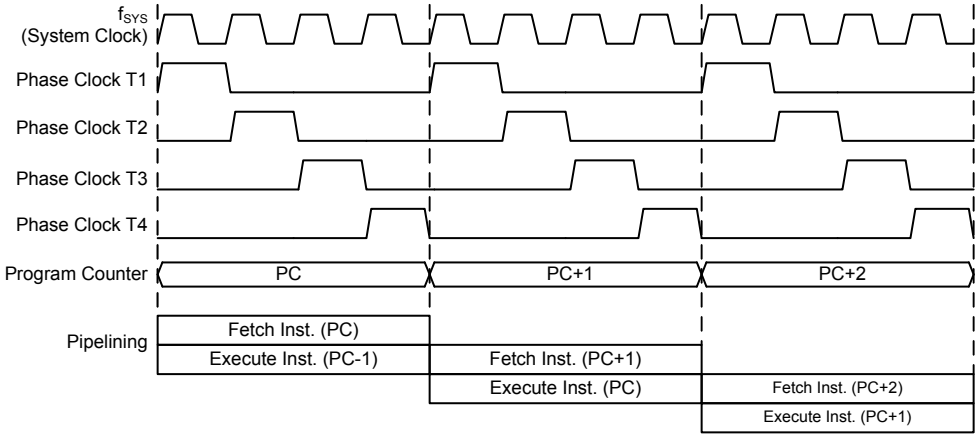

System Clock and Pipelining

For instructions involving branches, such as jump or call instructions, two machine cycles are required to complete instruction execution. An extra cycle is required as the program takes one cycle to first obtain the actual jump or call address and then another cycle to actually execute the branch. The requirement for this extra cycle should be taken into account by programmers in timing sensitive applications.

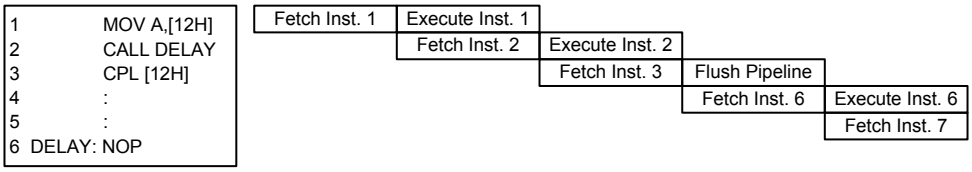

Instruction Fetching

Program Counter

During program execution, the Program Counter is used to keep track of the address of the next instruction to be executed. It is automatically incremented by one each time an instruction is executed except for instructions, such as "JMP" or "CALL" that demand a jump to a non-consecutive Program Memory address. Only the lower 8 bits, known as the Program Counter Low Register, are directly addressable by the application program.

When executing instructions requiring jumps to non-consecutive addresses such as a jump instruction, a subroutine call, interrupt or reset, etc., the microcontroller manages program control by loading the required address into the Program Counter. For conditional skip instructions, once the condition has been met, the next instruction, which has already been fetched during the present instruction execution, is discarded and a dummy cycle takes its place while the correct instruction is obtained.

Program Counter	
High Byte	**Low Byte (PCL Register)**
PC10~PC8	PCL7~PCL0

The lower byte of the Program Counter, known as the Program Counter Low register or PCL, is available for program control and is a readable and writeable register. By transferring data directly into this register, a short program jump can be executed directly, however, as only this low byte is available for manipulation, the jumps are limited to the present page of memory that is 256 locations. When such program jumps are executed it should also be noted that a dummy cycle will be inserted. Manipulating the PCL register may cause program branching, so an extra cycle is needed to pre-fetch.

Stack

This is a special part of the memory which is used to save the contents of the Program Counter only. The stack is organized into 4 levels and neither part of the data nor part of the program space, and is neither readable nor writeable. The activated level is indexed by the Stack Pointer, and is neither readable nor writeable. At a subroutine call or interrupt acknowledge signal, the contents of the Program Counter are pushed onto the stack. At the end of a subroutine or an interrupt routine, signaled by a return instruction, RET or RETI, the Program Counter is restored to its previous value from the stack. After a device reset, the Stack Pointer will point to the top of the stack.

If the stack is full and an enabled interrupt takes place, the interrupt request flag will be recorded but the acknowledge signal will be inhibited. When the Stack Pointer is decremented, by RET or RETI, the interrupt will be serviced. This feature prevents stack overflow allowing the programmer to use the structure more easily. However, when the stack is full, a CALL subroutine instruction can still be executed which will result in a stack overflow. Precautions should be taken to avoid such cases which might cause unpredictable program branching. If the stack is overflow, the first Program Counter saved in the stack will be lost.

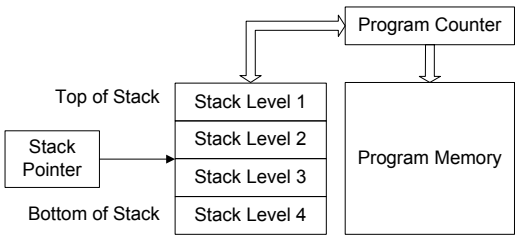

Arithmetic and Logic Unit – ALU

The arithmetic-logic unit or ALU is a critical area of the microcontroller that carries out arithmetic and logic operations of the instruction set. Connected to the main microcontroller data bus, the ALU receives related instruction codes and performs the required arithmetic or logical operations after which the result will be placed in the specified register. As these ALU calculation or operations may result in carry, borrow or other status changes, the status register will be correspondingly updated to reflect these changes. The ALU supports the following functions:

- Arithmetic operations: ADD, ADDM, ADC, ADCM, SUB, SUBM, SBC, SBCM, DAA
- Logic operations: AND, OR, XOR, ANDM, ORM, XORM, CPL, CPLA
- Rotation: RRA, RR, RRCA, RRC, RLA, RL, RLCA, RLC
- Increment and Decrement: INCA, INC, DECA, DEC
- Branch decision: JMP, SZ, SZA, SNZ, SIZ, SDZ, SIZA, SDZA, CALL, RET, RETI

Flash Program Memory

The Program Memory is the location where the user code or program is stored. For this device the Program Memory is Flash type, which means it can be programmed and re-programmed a large number of times, allowing the user the convenience of code modification on the same device. By using the appropriate programming tools, this Flash device offers users the flexibility to conveniently debug and develop their applications while also offering a means of field programming and updating.

Structure

The Program Memory has a capacity of 2K×16 bits. The Program Memory is addressed by the Program Counter and also contains data, table information and interrupt entries. Table data, which can be setup in any location within the Program Memory, is addressed by a separate table pointer register.

Special Vectors

Within the Program Memory, certain locations are reserved for the reset and interrupts. The location 000H is reserved for use by the device reset for program initialisation. After a device reset is initiated, the program will jump to this location and begin execution.

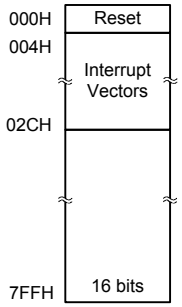

Program Memory Structure

Look-up Table

Any location within the Program Memory can be defined as a look-up table where programmers can store fixed data. To use the look-up table, the table pointer must first be setup by placing the address of the look up data to be retrieved in the table pointer registers, TBLP and TBHP. These registers define the total address of the look-up table.

After setting up the table pointer, the table data can be retrieved from the Program Memory using the "TABRD [m]" or "TABRDL [m]" instructions, respectively. When the instruction is executed, the lower order table byte from the Program Memory will be transferred to the user defined Data Memory register [m] as specified in the instruction. The higher order table data byte from the Program Memory will be transferred to the TBLH special register. Any unused bits in this transferred higher order byte will be read as "0".

The accompanying diagram illustrates the addressing data flow of the look-up table.

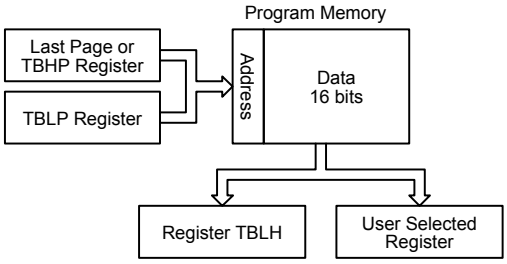

Table Program Example

The following example shows how the table pointer and table data is defined and retrieved from the microcontroller. This example uses raw table data located in the Program Memory which is stored there using the ORG statement. The value at this ORG statement is "700H" which refers to the start address of the last page within the 2K words Program Memory of the device. The table pointer is setup here to have an initial value of "06H". This will ensure that the first data read from the data table will be at the Program Memory address "706H" or 6 locations after the start of the TBHP specified page. Note that the value for the table pointer is referenced to the first address specified by the TBHP and TBLP registers if the "TABRD [m]" instruction is being used. The high byte of the table data which in this case is equal to zero will be transferred to the TBLH register automatically when the "TABRD [m]" instruction is executed.

Because the TBLH register is a read-only register and cannot be restored, care should be taken to ensure its protection if both the main routine and Interrupt Service Routine use table read instructions. If using the table read instructions, the Interrupt Service Routines may change the value of the TBLH and subsequently cause errors if used again by the main routine. As a rule it is recommended that simultaneous use of the table read instructions should be avoided. However, in situations where simultaneous use cannot be avoided, the interrupts should be disabled prior to the execution of any main routine table-read instructions. Note that all table related instructions require two instruction cycles to complete their operation.

Table Read Program Example

```
tempreg1 db ?   ; temporary register #1
tempreg2 db ?   ; temporary register #2
:
mov a,06h       ; initialise low table pointer - note that this address is referenced
mov tblp,a      ; to the last page or specific page
mov a,07h       ; initialise high table pointer
mov tbhp,a
:
tabrd tempreg1  ; transfers value in table referenced by table pointer
                ; data at program memory address "706H" transferred to tempreg1 and TBLH
dec tblp        ; reduce value of table pointer by one
tabrd tempreg2  ; transfers value in table referenced by table pointer
                ; data at program memory address "705H" transferred to tempreg2 and TBLH
                ; in this example the data "1AH" is transferred to tempreg1 and data "0FH" to
                ; register tempreg2, the value 00H will be transferred to the high byte
register TBLH
:
org 700h        ; sets initial address of program memory
dc 00Ah, 00Bh, 00Ch, 00Dh, 00Eh, 00Fh, 01Ah, 01Bh
:
```

In Circuit Programming – ICP

The provision of Flash type Program Memory provides the user with a means of convenient and easy upgrades and modifications to their programs on the same device. As an additional convenience, Holtek has provided a means of programming the microcontroller in-circuit using a 4-pin interface. This provides manufacturers with the possibility of manufacturing their circuit boards complete with a programmed or un-programmed microcontroller, and then programming or upgrading the program at a later stage. This enables product manufacturers to easily keep their manufactured products supplied with the latest program releases without removal and re-insertion of the device.

The Holtek Flash MCU to Writer Programming Pin correspondence table is as follows:

Holtek Writer Pins	MCU Programming Pins	Function
ICPDA	PA0	Programming Serial Data/Address
ICPCK	PA2	Programming Clock
VDD	VDD	Power Supply
VSS	VSS	Ground

The Program Memory can both be programmed serially in-circuit using this 4-wire interface. Data is downloaded and uploaded serially on a single pin with an additional line for the clock. Two additional lines are required for the power supply. The technical details regarding the in-circuit programming of the device are beyond the scope of this document and will be supplied in supplementary literature.

During the programming process, the user must take care of the ICPDA and ICPCK pins for data and clock programming purpose to ensure that no other outputs are connected to these two pins.

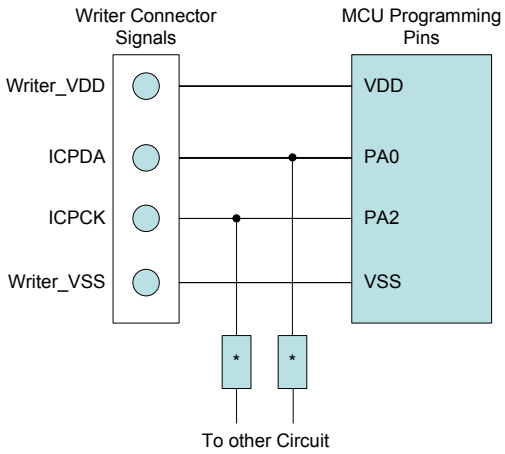

Note: * may be resistor or capacitor. The resistance of * must be greater than 1kΩ or the capacitance of * must be less than 1nF.

On-Chip Debug Support – OCDS

The device has an EV chip named BS45V3833, which is used to emulate the BS45F3833 device. This EV chip device also provides an "On-Chip Debug" function to debug the real MCU device during the development process. The EV chip and the real MCU device are almost functionally compatible except for the "On-Chip Debug" function. Users can use the EV chip device to emulate the real chip device behavior by connecting the OCDSDA and OCDSCK pins to the Holtek HT-IDE development tools. The OCDSDA pin is the OCDS Data/Address input/output pin while the OCDSCK pin is the OCDS clock input pin. When users use the EV chip for debugging, other functions which are shared with the OCDSDA and OCDSCK pins in the device will have no effect in the EV chip. However, the two OCDS pins which are pin-shared with the ICP programming pins are still used as the Flash Memory programming pins for ICP. For more detailed OCDS information, refer to the corresponding document named "Holtek e-Link for 8-bit MCU OCDS User's Guide".

Holtek e-Link Pins	EV Chip Pins	Pin Description
OCDSDA	OCDSDA	On-chip Debug Support Data/Address input/output
OCDSCK	OCDSCK	On-chip Debug Support Clock input
VDD	VDD	Power Supply
GND	VSS	Ground

RAM Data Memory

The Data Memory is a volatile area of 8-bit wide RAM internal memory and is the location where temporary information is stored.

Structure

Divided into two sections, the first of these is an area of RAM, known as the Special Purpose Data Memory. Here are located registers which are necessary for correct operation of the device. Many of these registers can be read from and written to directly under program control, however, some remain protected from user manipulation. The second area of Data Memory is known as the General Purpose Data Memory, which is reserved for general purpose use. All locations within this area are read and write accessible under program control.

The overall Data Memory is subdivided into two banks. The Special Purpose Data Memory registers are accessible in all banks, with the exception of the EEC register at address 40H, which is only accessible in Bank 1. Switching between the different Data Memory banks is achieved by setting the Bank Pointer to the correct value. The start address of the Data Memory for the device is the address 00H.

Special Purpose Data Memory	General Purpose Data Memory	
Address	Capacity	Address
Bank 0: 00H~7FH Bank 1: 00H~7FH	128×8	Bank 0: 80H~FFH

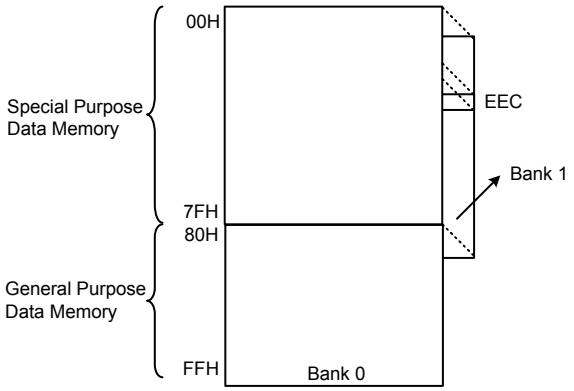

Data Memory Structure

General Purpose Data Memory

All microcontroller programs require an area of read/write memory where temporary data can be stored and retrieved for use later. It is this area of RAM memory that is known as General Purpose Data Memory. This area of Data Memory is fully accessible by the user programing for both reading and writing operations. By using the bit operation instructions individual bits can be set or reset under program control giving the user a large range of flexibility for bit manipulation in the Data Memory.

Special Purpose Data Memory

This area of Data Memory is where registers, necessary for the correct operation of the microcontroller, are stored. Most of the registers are both readable and writeable but some are protected and are readable only, the details of which are located under the relevant Special Function Register section. Note that for locations that are unused, any read instruction to these addresses will return the value "00H".

	Bank 0	Bank 1
00H	IAR0	
01H	MP0	
02H	IAR1	
03H	MP1	
04H	BP	
05H	ACC	
06H	PCL	
07H	TBLP	
08H	TBLH	
09H	TBHP	
0AH	STATUS	
0BH	SMOD	
0CH	LVDC	
0DH	INTEG	
0EH	INTC0	
0FH	INTC1	
10H	INTC2	
11H	MFI0	
12H	MFI1	
13H	MFI2	
14H	PA	
15H	PAC	
16H	PAPU	
17H	PAWU	
18H	MFI3	
19H		
1AH	WDTC	
1BH	TBC	
1CH		
1DH		
1EH	EEA	
1FH	EED	
20H		
21H		
22H		
23H		
24H	FADJL	
25H	FADJH	
26H	CTRL	
27H	LVRC	
28H	CTM0C0	
29H	CTM0C1	
2AH	CTM0DL	
2BH	CTM0DH	
2CH	CTM0AL	
2DH	CTM0AH	
2EH		
2FH	STMC0	
30H	STMC1	
31H	STMDL	
32H	STMDH	
33H	STMAL	
34H	STMAH	
35H		
36H	PC	
37H	PCC	
38H	PCPU	
39H	CTRL2	
3AH	CTRL3	
3BH	CTRL4	
3CH	CTRL5	
3DH	PB	
3EH	PBC	
3FH	PBPU	

	Bank 0	Bank 1
40H		EEC
41H		
42H		
43H	SLEWC0	
44H	SLEDC0	
45H	SLEDC1	
46H	PTMC0	
47H	PTMC1	
48H	PTMDL	
49H	PTMDH	
4AH	PTMAL	
4BH	PTMAH	
4CH	PTMRPL	
4DH	PTMRPH	
4EH	CTM2C0	
4FH	CTM2C1	
50H	CTM2DL	
51H	CTM2DH	
52H	CTM2AL	
53H	CTM2AH	
54H	CTM1C0	
55H	CTM1C1	
56H	CTM1DL	
57H	CTM1DH	
58H	CTM1AL	
59H	CTM1AH	
5AH		
5BH	OCVPC0	
5CH	OCVPC1	
5DH	OCVPC2	
5EH	OCVPDA	
5FH	OCVPOCAL	
60H	OCVPCCAL	
61H		
62H	TKTMR	
63H	TKC0	
64H	TK16DL	
65H	TK16DH	
66H	TKC1	
67H	TKM016DL	
68H	TKM016DH	
69H	TKM0ROL	
6AH	TKM0ROH	
6BH	TKM0C0	
6CH	TKM0C1	
6DH	SADOL	
6EH	SADOH	
6FH	SADC0	
70H	SADC1	
71H	ACERL	
72H		
⋮		
7FH		

: Unused, read as 00H

Special Purpose Data Memory Structure

Special Function Register Description

Most of the Special Function Register details will be described in the relevant functional section. However, several registers require a separate description in this section.

Indirect Addressing Registers – IAR0, IAR1

The Indirect Addressing Registers, IAR0 and IAR1, although having their locations in normal RAM register space, do not actually physically exist as normal registers. The method of indirect addressing for RAM data manipulation uses these Indirect Addressing Registers and Memory Pointers, in contrast to direct memory addressing, where the actual memory address is specified. Actions on the IAR0 and IAR1 registers will result in no actual read or write operation to these registers but rather to the memory location specified by their corresponding Memory Pointers, MP0 or MP1. Acting as a pair, IAR0 and MP0 can together access data from Bank 0 while the IAR1 and MP1 register pair can access data from any bank. As the Indirect Addressing Registers are not physically implemented, reading the Indirect Addressing Registers indirectly will return a result of "00H" and writing to the registers indirectly will result in no operation.

Memory Pointers – MP0, MP1

Two Memory Pointers, known as MP0 and MP1 are provided. These Memory Pointers are physically implemented in the Data Memory and can be manipulated in the same way as normal registers providing a convenient way with which to address and track data. When any operation to the relevant Indirect Addressing Registers is carried out, the actual address that the microcontroller is directed to is the address specified by the related Memory Pointer. MP0, together with Indirect Addressing Register, IAR0, are used to access data from Bank 0, while MP1 and IAR1 are used to access data from all banks according to BP register. Direct Addressing can only be used within Bank 0, all other Banks must be addressed indirectly using MP1 and IAR1.

The following example shows how to clear a section of four Data Memory locations already defined as locations adres1 to adres4.

Indirect Addressing Program Example

```
data .section ´data´
adres1   db ?
adres2   db ?
adres3   db ?
adres4   db ?
block    db ?
code .section at 0 ´code´
org 00h
start:
     mov a,04h            ; setup size of block
     mov block,a
     mov a,offset adres1  ; Accumulator loaded with first RAM address
     mov mp0,a            ; setup memory pointer with first RAM address
loop:
     clr IAR0             ; clear the data at address defined by mp0
     inc mp0              ; increment memory pointer
     sdz block            ; check if last memory location has been cleared
     jmp loop
continue:
```

The important point to note here is that in the example shown above, no reference is made to specific Data Memory addresses.

Bank Pointer – BP

For this device, the Data Memory is divided into two banks, Bank0 and Bank1. Selecting the required Data Memory area is achieved using the Bank Pointer. Bit 0 of the Bank Pointer is used to select Data Memory Bank 0 or 1.

The Data Memory is initialised to Bank 0 after a reset, except for a WDT time-out reset in IDLE or SLEEP Mode, in which case, the Data Memory bank remains unaffected. It should be noted that the Special Purpose Data Memory is not affected by the bank selection, which means that the Special Function Registers can be accessed from within any bank. Directly addressing the Data Memory will always result in Bank 0 being accessed irrespective of the value of the Bank Pointer. Accessing data from Bank1 must be implemented using Indirect Addressing.

- **BP Register**

Bit	7	6	5	4	3	2	1	0
Name	—	—	—	—	—	—	—	DMBP0
R/W	—	—	—	—	—	—	—	R/W
POR	—	—	—	—	—	—	—	0

Bit 7 ~ 1 Unimplemented, read as "0"

Bit 0 **DMBP0**: Data Memory Bank Selection
0: Bank 0
1: Bank 1

Accumulator – ACC

The Accumulator is central to the operation of any microcontroller and is closely related with operations carried out by the ALU. The Accumulator is the place where all intermediate results from the ALU are stored. Without the Accumulator it would be necessary to write the result of each calculation or logical operation such as addition, subtraction, shift, etc., to the Data Memory resulting in higher programming and timing overheads. Data transfer operations usually involve the temporary storage function of the Accumulator; for example, when transferring data between one user-defined register and another, it is necessary to do this by passing the data through the Accumulator as no direct transfer between two registers is permitted.

Program Counter Low Register – PCL

To provide additional program control functions, the low byte of the Program Counter is made accessible to programmers by locating it within the Special Purpose area of the Data Memory. By manipulating this register, direct jumps to other program locations are easily implemented. Loading a value directly into this PCL register will cause a jump to the specified Program Memory location, however, as the register is only 8-bit wide, only jumps within the current Program Memory page are permitted. When such operations are used, note that a dummy cycle will be inserted.

Look-up Table Registers – TBLP, TBHP, TBLH

These three special function registers are used to control operation of the look-up table which is stored in the Program Memory. TBLP and TBHP are the table pointers and indicate the location where the table data is located. Their value must be setup before any table read commands are executed. Their value can be changed, for example using the "INC" or "DEC" instruction, allowing for easy table data pointing and reading. TBLH is the location where the high order byte of the table data is stored after a table read data instruction has been executed. Note that the lower order table data byte is transferred to a user defined location.

Status Register – STATUS

This 8-bit register contains the zero flag (Z), carry flag (C), auxiliary carry flag (AC), overflow flag (OV), power down flag (PDF), and watchdog time-out flag (TO). These arithmetic/logical operation and system management flags are used to record the status and operation of the microcontroller.

With the exception of the TO and PDF flags, bits in the status register can be altered by instructions like most other registers. Any data written into the status register will not change the TO or PDF flag. In addition, operations related to the status register may give different results due to the different instruction operations. The TO flag can be affected only by a system power-up, a WDT time-out or by executing the "CLR WDT" or "HALT" instruction. The PDF flag is affected only by executing the "HALT" or "CLR WDT" instruction or during a system power-up.

The Z, OV, AC and C flags generally reflect the status of the latest operations.

- C is set if an operation results in a carry during an addition operation or if a borrow does not take place during a subtraction operation; otherwise C is cleared. C is also affected by a rotate through carry instruction.
- AC is set if an operation results in a carry out of the low nibbles in addition, or no borrow from the high nibble into the low nibble in subtraction; otherwise AC is cleared.
- Z is set if the result of an arithmetic or logical operation is zero; otherwise Z is cleared.
- OV is set if an operation results in a carry into the highest-order bit but not a carry out of the highest-order bit, or vice versa; otherwise OV is cleared.
- PDF is cleared by a system power-up or executing the "CLR WDT" instruction. PDF is set by executing the "HALT" instruction.
- TO is cleared by a system power-up or executing the "CLR WDT" or "HALT" instruction. TO is set by a WDT time-out.

In addition, on entering an interrupt sequence or executing a subroutine call, the status register will not be pushed onto the stack automatically. If the contents of the status registers are important and if the subroutine can corrupt the status register, precautions must be taken to correctly save it.

- **STATUS Register**

Bit	7	6	5	4	3	2	1	0
Name	—	—	TO	PDF	OV	Z	AC	C
R/W	—	—	R	R	R/W	R/W	R/W	R/W
POR	—	—	0	0	x	x	x	x

"x": unknown

Bit 7~6 Unimplemented, read as "0"

Bit 5 **TO**: Watchdog Time-out flag
0: After power up or executing the "CLR WDT" or "HALT" instruction
1: A watchdog time-out occurred.

Bit 4 **PDF**: Power down flag
0: After power up or executing the "CLR WDT" instruction
1: By executing the "HALT" instruction

Bit 3 **OV**: Overflow flag
0: No overflow
1: An operation results in a carry into the highest-order bit but not a carry out of the highest-order bit or vice versa.

Bit 2 **Z**: Zero flag
0: The result of an arithmetic or logical operation is not zero
1: The result of an arithmetic or logical operation is zero

Bit 1 **AC**: Auxiliary flag
0: No auxiliary carry
1: An operation results in a carry out of the low nibbles in addition, or no borrow from the high nibble into the low nibble in subtraction

Bit 0 **C**: Carry flag
0: No carry-out
1: An operation results in a carry during an addition operation or if a borrow does not take place during a subtraction operation
C is also affected by a rotate through carry instruction.

EEPROM Data Memory

One of the special features in the device is its internal EEPROM Data Memory. EEPROM, which stands for Electrically Erasable Programmable Memory, is by its nature a non-volatile form of memory, with data retention even when its power supply is removed. By incorporating this kind of data memory, a whole new host of application possibilities are made available to the designer. The availability of EEPROM storage allows information such as product identification numbers, calibration values, specific user data, system setup data or other product information to be stored directly within the product microcontroller. The process of reading and writing data to the EEPROM memory has been reduced to a very trivial affair.

EEPROM Data Memory Structure

The EEPROM Data Memory capacity is 32×8 bits. Unlike the Program Memory and Data Memory, the EEPROM Data Memory is not directly mapped and is therefore not directly accessible in the same way as the other types of memory. Read and Write operations to the EEPROM are carried out in single byte operations using an address and data register in Bank 0 and a single control register in Bank 1.

EEPROM Registers

Three registers control the overall operation of the internal EEPROM Data Memory. These are the address register, EEA, the data register, EED and a single control register, EEC. As both the EEA and EED registers are located in Bank 0, they can be directly accessed in the same way as any other Special Function Register. The EEC register however, being located in Bank 1, cannot be directly addressed directly and can only be read from or written to indirectly using the MP1 Memory Pointer and Indirect Addressing Register, IAR1. Because the EEC control register is located at address 40H in Bank 1, the MP1 Memory Pointer must first be set to the value 40H and the Bank Pointer register, BP, set to the value, 01H, before any operations on the EEC register are executed.

Register Name	Bit							
	7	6	5	4	3	2	1	0
EEA	—	—	—	EEA4	EEA3	EEA2	EEA1	EEA0
EED	D7	D6	D5	D4	D3	D2	D1	D0
EEC	—	—	—	—	WREN	WR	RDEN	RD

EEPROM Control Register List

- **EEA Register**

Bit	7	6	5	4	3	2	1	0
Name	—	—	—	EEA4	EEA3	EEA2	EEA1	EEA0
R/W	—	—	—	R/W	R/W	R/W	R/W	R/W
POR	—	—	—	0	0	0	0	0

Bit 7 ~ 5 Unimplemented, read as "0"
Bit 4 ~ 0 Data EEPROM address
Data EEPROM address bit 4 ~ bit 0

- **EED Register**

Bit	7	6	5	4	3	2	1	0
Name	D7	D6	D5	D4	D3	D2	D1	D0
R/W	R/W	R/W	R/W	R/W	R/W	R/W	R/W	R/W
POR	0	0	0	0	0	0	0	0

Bit 7 ~ 0 Data EEPROM data
Data EEPROM data bit 7 ~ bit 0

- **EEC Register**

Bit	7	6	5	4	3	2	1	0
Name	—	—	—	—	WREN	WR	RDEN	RD
R/W	—	—	—	—	R/W	R/W	R/W	R/W
POR	—	—	—	—	0	0	0	0

Bit 7 ~ 4 Unimplemented, read as "0"

Bit 3 **WREN**: Data EEPROM Write Enable
0: Disable
1: Enable
This is the Data EEPROM Write Enable Bit which must be set high before Data EEPROM write operations are carried out. Clearing this bit to zero will inhibit Data EEPROM write operations.

Bit 2 **WR**: EEPROM Write Control
0: Write cycle has finished
1: Activate a write cycle
This is the Data EEPROM Write Control Bit and when set high by the application program will activate a write cycle. This bit will be automatically reset to zero by the hardware after the write cycle has finished. Setting this bit high will have no effect if the WREN has not first been set high.

Bit 1 **RDEN**: Data EEPROM Read Enable
0: Disable
1: Enable
This is the Data EEPROM Read Enable Bit which must be set high before Data EEPROM read operations are carried out. Clearing this bit to zero will inhibit Data EEPROM read operations.

Bit 0 **RD**: EEPROM Read Control
0: Read cycle has finished
1: Activate a read cycle
This is the Data EEPROM Read Control Bit and when set high by the application program will activate a read cycle. This bit will be automatically reset to zero by the hardware after the read cycle has finished. Setting this bit high will have no effect if the RDEN has not first been set high.

Note: The WREN, WR, RDEN and RD cannot be set to "1" at the same time in one instruction. The WR and RD cannot be set to "1" at the same time.

Reading Data from the EEPROM

To read data from the EEPROM, The EEPROM address of the data to be read must then be placed in the EEA register. Then the read enable bit, RDEN, in the EEC register must first be set high to enable the read function.If the RD bit in the EEC register is now set high, a read cycle will be initiated. Setting the RD bit high will not initiate a read operation if the RDEN bit has not been set. When the read cycle terminates, the RD bit will be automatically cleared to zero, after which the data can be read from the EED register. The data will remain in the EED register until another read or write operation is executed. The application program can poll the RD bit to determine when the data is valid for reading.

Writing Data to the EEPROM

To write data to the EEPROM, the EEPROM address of the data to be written must first be placed in the EEA register and the data placed in the EED register. Then the write enable bit, WREN, in the EEC register must first be set high to enable the write function. After this, the WR bit in the EEC register must be immediately set high to initiate a write cycle. These two instructions must be executed consecutively. The global interrupt bit EMI should also first be cleared before implementing any write operations, and then set again after the write cycle has started. Note that setting the WR bit high will not initiate a write cycle if the WREN bit has not been set. As the EEPROM write cycle is controlled using an internal timer whose operation is asynchronous to microcontroller system clock, a certain time will elapse before the data will have been written into the EEPROM. Detecting when the write cycle has finished can be implemented either by polling the WR bit in the EEC register or by using the EEPROM interrupt. When the write cycle terminates, the WR bit will be automatically cleared to zero by the microcontroller, informing the user that the data has been written to the EEPROM. The application program can therefore poll the WR bit to determine when the write cycle has ended.

Write Protection

Protection against inadvertent write operation is provided in several ways. After the device is powered on, the Write enable bit in the control register will be cleared preventing any write operations. Also at power-on the Bank Pointer, BP, will be reset to zero, which means that Data Memory Bank 0 will be selected. As the EEPROM control register is located in Bank 1, this adds a further measure of protection against spurious write operations. During normal program operation, ensuring that the Write Enable bit in the control register is cleared will safeguard against incorrect write operations.

EEPROM Interrupt

The EEPROM write interrupt is generated when an EEPROM write cycle has ended. The EEPROM interrupt must first be enabled by setting the DEE bit in the relevant interrupt register. However as the EEPROM is contained within a Multi-function Interrupt, the associated multi-function interrupt enable bit must also be set. When an EEPROM write cycle ends, the DEF request flag and its associated multi-function interrupt request flag will both be set. If the global, EEPROM and Multi-function interrupts are enabled and the stack is not full, a jump to the associated Multi-function Interrupt vector will take place. When the interrupt is serviced only the Multi-function interrupt flag will be automatically reset, the EEPROM interrupt flag must be manually reset by the application program. More details can be obtained in the Interrupt section.

Programming Considerations

Care must be taken that data is not inadvertently written to the EEPROM. Protection can be enhanced by ensuring that the Write Enable bit is normally cleared to zero when not writing. Also the Bank Pointer could be normally cleared to zero as this would inhibit access to Bank 1 where the EEPROM control register exist. Although certainly not necessary, consideration might be given in the application program to the checking of the validity of new write data by a simple read back process. When writing data the WR bit must be set high immediately after the WREN bit has been set high, to ensure the write cycle executes correctly. The global interrupt bit EMI should also be cleared before a write cycle is executed and then re-enabled after the write cycle starts. Note that the device should not enter the IDLE or SLEEP mode until the EEPROM read or write operation is totally completed, otherwise, the EEPROM read or write operation will fail.

Programming Examples

- **Reading data from the EEPROM – polling method**

```
MOV A, EEPROM_ADRES             ; user defined address
MOV EEA, A
MOV A, 040H                     ; setup memory pointer MP1
MOV MP1, A                      ; MP1 points to EEC register
MOV A, 01H                      ; setup Bank Pointer
MOV BP, A
SET IAR1.1                      ; set RDEN bit, enable read operations
SET IAR1.0                      ; start Read Cycle - set RD bit
BACK:
SZ IAR1.0                       ; check for read cycle end
JMP BACK
CLR IAR1                        ; disable EEPROM write
CLR BP
MOV A, EED                      ; move read data to register
MOV READ_DATA, A
```

- **Writing Data to the EEPROM – polling method**

```
MOV A, EEPROM_ADRES             ; user defined address
MOV EEA, A
MOV A, EEPROM_DATA              ; user defined data
MOV EED, A
MOV A, 040H                     ; setup memory pointer MP1
MOV MP1, A                      ; MP1 points to EEC register
MOV A, 01H                      ; setup Bank Pointer
MOV BP, A                       ; BP points to data memory bank 1
CLR   EMI
SET IAR1.3                      ; set WREN bit, enable write operations
SET IAR1.2                      ; start Write Cycle - set WR bit – executed immediately
                                ; after set WREN bit
SET EMI
BACK:
SZ IAR1.2                       ; check for write cycle end
JMP BACK
CLR IAR1                        ; disable EEPROM write
CLR BP
```

Oscillators

Various oscillator options offer the user a wide range of functions according to their various application requirements. The flexible features of the oscillator functions ensure that the best optimisation can be achieved in terms of speed and power saving. Oscillator selections and operation are selected through configuration options and registers.

Oscillator Overview

In addition to being the source of the main system clock the oscillators also provide clock sources for the Watchdog Timer and Time Base Interrupts. Fully integrated internal oscillators, requiring no external components, are provided to form a range of both fast and slow system oscillators. The higher frequency oscillators provide higher performance but carry with it the disadvantage of higher power requirements, while the opposite is of course true for the lower frequency oscillators. With the capability of dynamically switching between fast and slow system clock, the device has the flexibility to optimize the performance/power ratio, a feature especially important in power sensitive portable applications.

Type	Name	Freq.
Internal High Speed RC Oscillator	HIRC	4MHz/8MHz/12MHz
Internal Low Speed RC Oscillator	LIRC	32kHz
PTM Dedicated RC Oscillator	PTMOSC	12MHz (adjustable)

Oscillator Types

System Clock Configurations

There are two methods of generating the system clock, a high speed internal RC oscillator and a low speed internal RC oscillator. Selecting whether the low or high speed oscillator is used as the system oscillator is implemented using the HLCLK bit and CKS2 ~ CKS0 bits in the SMOD register and as the system clock can be dynamically selected.

The actual source clock used for the high speed and the low speed oscillators is chosen via registers. The frequency of the slow speed or high speed system clock is also determined using the HLCLK bit and CKS2 ~ CKS0 bits in the SMOD register. Note that two oscillator selections must be made namely one high speed and one low speed system oscillators. It is not possible to choose a no-oscillator selection for either the high or low speed oscillator.

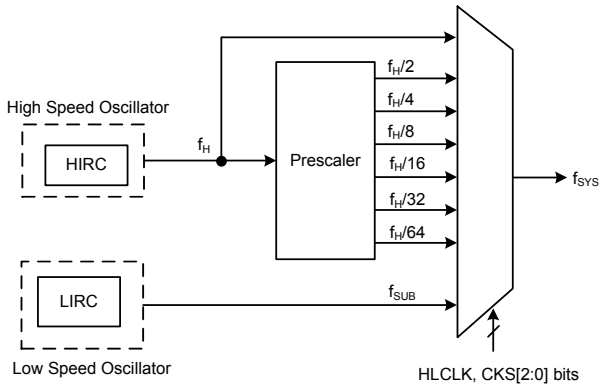

System Clock Configurations

Internal High Speed RC Oscillator – HIRC

The internal RC oscillator is a fully integrated system oscillator requiring no external components. The internal RC oscillator has three fixed frequency of either 4MHz, 8MHz or 12MHz. Device trimming during the manufacturing process and the inclusion of internal frequency compensation circuits are used to ensure that the influence of the power supply voltage, temperature and process variations on the oscillation frequency are minimised.

Internal 32kHz Oscillator – LIRC

The Internal 32kHz system oscillator is the low frequency oscillator. It is a fully integrated RC oscillator with a typical frequency of 32kHz at 5V, requiring no external components for its implementation. Device trimming during the manufacturing process and the inclusion of internal frequency compensation circuits are used to ensure that the influence of the power supply voltage, temperature and process variations on the oscillation frequency are minimised.

PTM Dedicated RC Oscillator – PTMOSC

The PTM Dedicated Oscillator is also a fully integrated RC oscillator requiring no external components. This internal oscillator has a frequency of 12MHz which can be fine-adjusted by changing the ADJ[8:0] bits field value. Device trimming during the manufacturing process and the inclusion of internal frequency compensation circuits are used to ensure that the influence of the power supply voltage, temperature and process variations on the oscillation frequency are minimised.

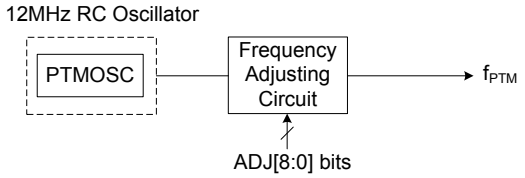

The ADJ bit field in the FADJH and FADJL registers is used to adjust the PTMOSC oscillation frequency. The PTMOSC oscillator is supposed to have a frequency of 12MHz with the default ADJ[8:0] field value, 100000000B. The greater value the ADJ[8:0] field is written, the lower frequency the PTMOSC oscillator has. The PTMOSC oscillator will have a maximum adjusted frequency when the ADJ[8:0] field is set to 000000000B. Note that a certain time delay for the PTMOSC oscillator stabilization should be allowed when the PTMOSC oscillation frequency is changed by configuring the ADJ[8:0] field. The new PTMOSC frequency cannot be used until the updated frequency is stable.

- **FADJL Register**

Bit	7	6	5	4	3	2	1	0
Name	ADJ7	ADJ6	ADJ5	ADJ4	ADJ3	ADJ2	ADJ1	ADJ0
R/W	R/W	R/W	R/W	R/W	R/W	R/W	R/W	R/W
POR	0	0	0	0	0	0	0	0

Bit 7~0 **ADJ7~ADJ0**: PTMOSC frequency adjustment control bit 7 ~ bit 0

- **FADJH Register**

Bit	7	6	5	4	3	2	1	0
Name	—	—	—	—	—	—	—	ADJ8
R/W	—	—	—	—	—	—	—	R/W
POR	—	—	—	—	—	—	—	1

Bit 7~1 Unimplemented, read as "0"

Bit 0 **ADJ8**: PTMOSC frequency adjustment control bit 8

- **CTRL2 Register**

Bit	7	6	5	4	3	2	1	0
Name	FPTMEN	FPTMF	—	—	—	—	OCVPS1	OCVPS0
R/W	R/W	R	—	—	—	—	R/W	R/W
POR	1	0	—	—	—	—	0	0

Bit 7 **FPTMEN**: PTMOSC oscillator enable control
0: Disable
1: Enable

Bit 6 **FPTMF**: PTMOSC oscillator stable flag
0: Unstable
1: Stable
This bit is used to indicate whether the PTMOSC oscillator is stable or not. The PTMOSC oscillator stable time will spend 256 clocks when the FPTMEN bit is set to 1 to enable the PTMOSC oscillator.

Bit 5~2 Unimplemented, read as "0"

Bit 1~0 **OCVPS1~OCVPS0**: OCVPAI0 signal input source pin selection
Described in Over Current / Voltage Protection section

Operating Modes and System Clocks

Present day applications require that their microcontrollers have high performance but often still demand that they consume as little power as possible, conflicting requirements that are especially true in battery powered portable applications. The fast clocks required for high performance will by their nature increase current consumption and of course vice-versa, lower speed clocks reduce current consumption. As Holtek has provided this device with both high and low speed clock sources and the means to switch between them dynamically, the user can optimise the operation of their microcontroller to achieve the best performance/power ratio.

System Clocks

The device has many different clock sources for both the CPU and peripheral function operation. By providing the user with a wide range of clock options using configuration options and register programming, a clock system can be configured to obtain maximum application performance.

The main system clock, can come from either a high frequency f_H or low frequency f_{SUB} source, and is selected using the HLCLK bit and CKS2~CKS0 bits in the SMOD register. The high speed system clock can be sourced from the HIRC oscillator. The low speed system clock source can be sourced from the LIRC oscillator. The other choice, which is a divided version of the high speed system oscillator has a range of $f_H/2$~$f_H/64$.

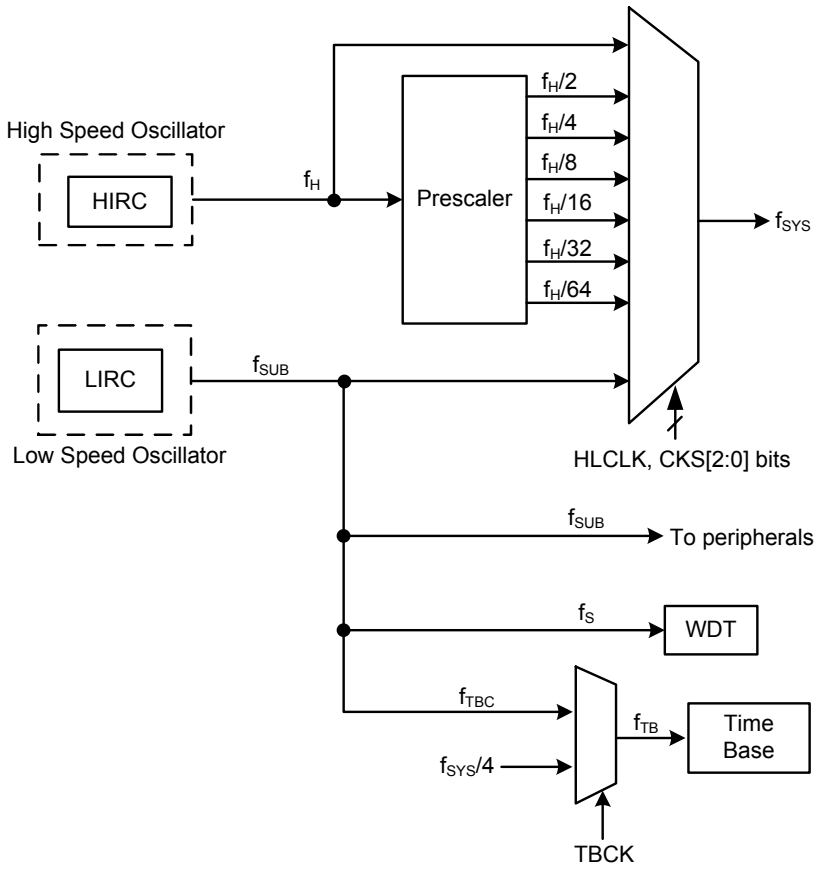

Device Clock Configurations

Note: When the system clock source f_{SYS} is switched to f_{SUB} from f_H, the high speed oscillator will stop to conserve the power. Thus there is no f_H~$f_H/64$ for peripheral circuit to use.

System Operating Modes

There are six different modes of operation for the microcontroller, each one with its own special characteristics and which can be chosen according to the specific performance and power requirements of the application. There are two modes allowing normal operation of the microcontroller, the NORMAL Mode and SLOW Mode. The remaining four modes, the SLEEP0, SLEEP1, IDLE0 and IDLE1 Mode are used when the microcontroller CPU is switched off to conserve power.

Operating Mode	Description			
	CPU	f_{SYS}	f_H	f_{SUB}
NORMAL mode	On	f_H~f_H/64	On	On
SLOW mode	On	f_{SUB}	Off	On
ILDE0 mode	Off	Off	Off	On
IDLE1 mode	Off	On	On/Off	On
SLEEP0 mode	Off	Off	Off	Off
SLEEP1 mode	Off	Off	Off	On

NORMAL Mode

As the name suggests this is one of the main operating modes where the microcontroller has all of its functions operational and where the system clock is provided by the high speed oscillator. This mode operates allowing the microcontroller to operate normally with a clock source will come from the high speed oscillator, HIRC. The high speed oscillator will however first be divided by a ratio ranging from 1 to 64, the actual ratio being selected by the CKS2~CKS0 and HLCLK bits in the SMOD register. Although a high speed oscillator is used, running the microcontroller at a divided clock ratio reduces the operating current.

SLOW Mode

This is also a mode where the microcontroller operates normally although now with a slower speed clock source. The clock source used will be from f_{SUB}. Running the microcontroller in this mode allows it to run with much lower operating currents. In the SLOW Mode, the f_H is off.

SLEEP0 Mode

The SLEEP Mode is entered when an HALT instruction is executed and when the IDLEN bit in the SMOD register is low. In the SLEEP0 mode the CPU will be stopped, and the f_{SUB} and f_S clocks will be stopped too, and the Watchdog Timer function is disabled. In this mode, the LVDEN is must cleared to zero. If the LVDEN is set high, it won't enter the SLEEP0 Mode.

SLEEP1 Mode

The SLEEP Mode is entered when an HALT instruction is executed and when the IDLEN bit in the SMOD register is low. In the SLEEP1 mode the CPU will be stopped. However the f_{SUB} and f_S clocks will continue to operate if the LVDEN is "1" or the Watchdog Timer function is enabled.

IDLE0 Mode

The IDLE0 Mode is entered when a HALT instruction is executed and when the IDLEN bit in the SMOD register is high and the FSYSON bit in the CTRL register is low. In the IDLE0 Mode the system oscillator will be inhibited from driving the CPU, the system oscillator will be stopped, the low frequency clock f_{SUB} will be on to drive some peripheral functions.

IDLE1 Mode

The IDLE1 Mode is entered when a HALT instruction is executed and when the IDLEN bit in the SMOD register is high and the FSYSON bit in the CTRL register is high. In the IDLE1 Mode the system oscillator will be inhibited from driving the CPU, the system oscillator will continue to run, and this system oscillator may be high speed or low speed system oscillator. In the IDLE1 Mode the low frequency clock f_{SUB} will be on to drive some peripheral functions.

Note: If LVDEN=1 and the SLEEP or IDLE mode is entered, the LVD function will not be disabled, and the f_{SUB} clock will be forced to be enabled.

Control Registers

The SMOD and CTRL registers are used to control the internal clocks within the device.

- **SMOD Register**

Bit	7	6	5	4	3	2	1	0
Name	CKS2	CKS1	CKS0	—	LTO	HTO	IDLEN	HLCLK
R/W	R/W	R/W	R/W	—	R	R	R/W	R/W
POR	0	0	0	—	0	0	1	1

Bit 7 ~ 5 **CKS2 ~ CKS0**: The system clock selection when HLCLK is "0"
000: f_{SUB}
001: f_{SUB}
010: $f_H/64$
011: $f_H/32$
100: $f_H/16$
101: $f_H/8$
110: $f_H/4$
111: $f_H/2$

These three bits are used to select which clock is used as the system clock source. In addition to the system clock source, which can be LIRC, a divided version of the high speed system oscillator can also be chosen as the system clock source.

Bit 4 Unimplemented, read as "0"

Bit 3 **LTO**: LIRC System OSC SST ready flag
0: Not ready
1: Ready

This is the low speed system oscillator SST ready flag which indicates when the low speed system oscillator is stable after power on reset or a wake-up has occurred. The flag will change to a high level after 1~2 cycles.

Bit 2 **HTO**: HIRC System OSC SST ready flag
0: Not ready
1: Ready

This is the high speed system oscillator SST ready flag which indicates when the high speed system oscillator is stable after a wake-up has occurred. This flag is cleared to "0" by hardware when the device is powered on and then changes to a high level after the high speed system oscillator is stable. Therefore this flag will always be read as "1" by the application program after device power-on. The flag will be low when in the SLEEP or IDLE0 Mode but after power on reset or a wake-up has occurred, the flag will change to a high level after 15~16 clock cycles if the HIRC oscillator is used.

Bit 1 **IDLEN**: IDLE Mode Control
0: Disable
1: Enable
This is the IDLE Mode Control bit and determines what happens when the HALT instruction is executed. If this bit is high, when a HALT instruction is executed the device will enter the IDLE Mode. In the IDLE1 Mode the CPU will stop running but the system clock will continue to keep the peripheral functions operational, if FSYSON bit is high. If FSYSON bit is low, the CPU and the system clock will all stop in IDLE0 mode. If the IDLEN bit is low the device will enter the SLEEP Mode when a HALT instruction is executed.

Bit 0 **HLCLK**: System Clock Selection
0: $f_H/2 \sim f_H/64$ or f_{SUB}
1: f_H
This bit is used to select if the f_H clock or the $f_H/2 \sim f_H/64$ or f_{SUB} clock is used as the system clock. When the bit is high the f_H clock will be selected and if low the $f_H/2 \sim f_H/64$ or f_{SUB} clock will be selected. When system clock switches from the f_H clock to the f_{SUB} clock and the f_H clock will be automatically switched off to conserve power.

- **CTRL Register**

Bit	7	6	5	4	3	2	1	0
Name	FSYSON	—	—	—	—	LVRF	LRF	WRF
R/W	R/W	—	—	—	—	R/W	R/W	R/W
POR	0	—	—	—	—	x	0	0

"x": unknown

Bit 7 **FSYSON**: f_{SYS} Control in IDLE Mode
0: Disable
1: Enable

Bit 6 ~ 3 Unimplemented, read as "0"

Bit 2 **LVRF**: LVR function reset flag
Described elsewhere

Bit 1 **LRF**: LVRC control register software reset flag
Described elsewhere

Bit 0 **WRF**: WDTC control register software reset flag
Described elsewhere

Operating Mode Switching

The device can switch between operating modes dynamically allowing the user to select the best performance/power ratio for the present task in hand. In this way microcontroller operations that do not require high performance can be executed using slower clocks thus requiring less operating current and prolonging battery life in portable applications.

In simple terms, Mode Switching between the NORMAL Mode and SLOW Mode is executed using the HLCLK bit and CKS2~CKS0 bits in the SMOD register while Mode Switching from the NORMAL/SLOW Modes to the SLEEP/IDLE Modes is executed via the HALT instruction. When a HALT instruction is executed, whether the device enters the IDLE Mode or the SLEEP Mode is determined by the condition of the IDLEN bit in the SMOD register and FSYSON in the CTRL register.

When the HLCLK bit switches to a low level, which implies that clock source is switched from the high speed clock source, f_H, to the clock source, $f_H/2$~$f_H/64$ or f_{SUB}. If the clock is from the f_{SUB}, the high speed clock source will stop running to conserve power. When this happens it must be noted that the $f_H/16$ and $f_H/64$ internal clock sources will also stop running, which may affect the operation of other internal functions such as the TMs. The accompanying flowchart shows what happens when the device moves between the various operating modes.

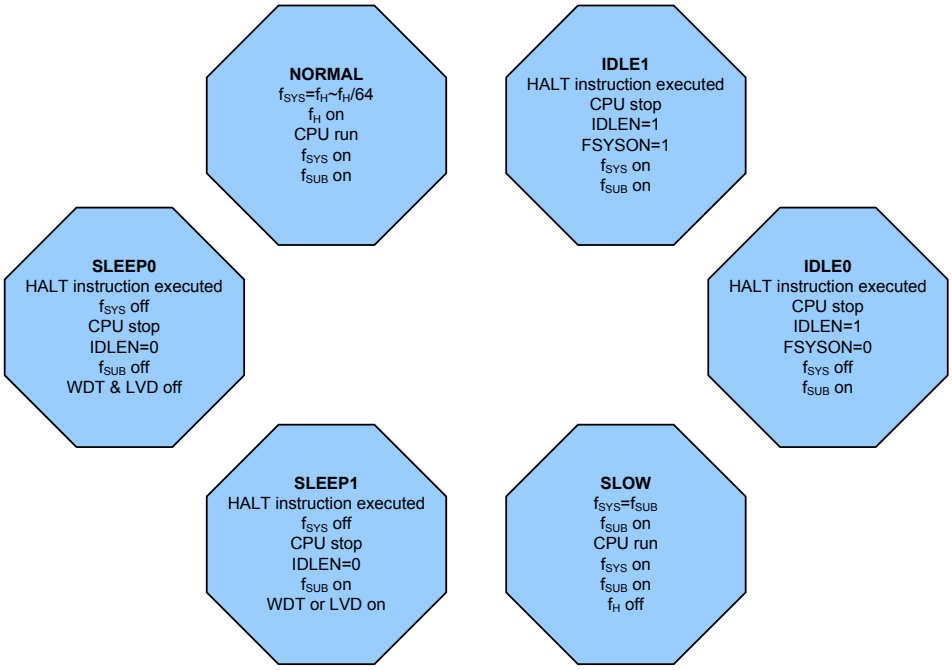

NORMAL Mode to SLOW Mode Switching

When running in the NORMAL Mode, which uses the high speed system oscillator, and therefore consumes more power, the system clock can switch to run in the SLOW Mode by setting the HLCLK bit to "0" and setting the CKS2~CKS0 bits to "000" or "001" in the SMOD register. This will then use the low speed system oscillator which will consume less power. Users may decide to do this for certain operations which do not require high performance and can subsequently reduce power consumption.

The SLOW Mode is sourced from the LIRC oscillator and therefore requires this oscillator to be stable before full mode switching occurs. This is monitored using the LTO bit in the SMOD register.

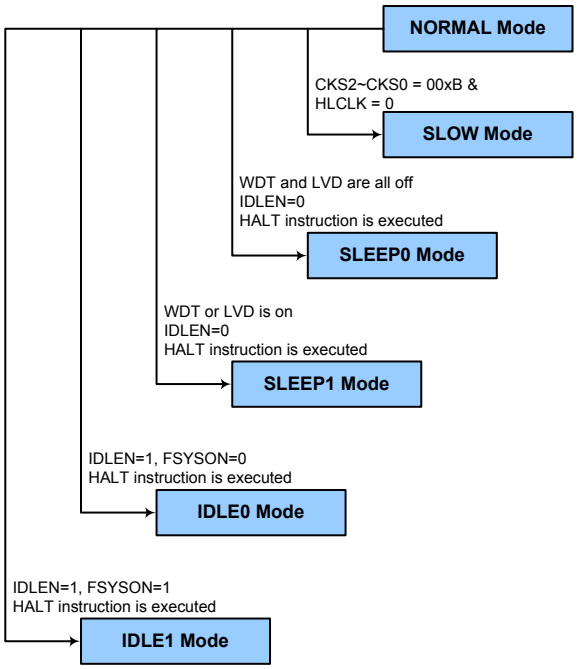

SLOW Mode to NORMAL Mode Switching

In SLOW Mode the system uses LIRC low speed system oscillator. To switch back to the NORMAL Mode, where the high speed system oscillator is used, the HLCLK bit should be set to "1" or HLCLK bit is "0", but CKS2~CKS0 is set to "010", "011", "100", "101", "110" or "111". As a certain amount of time will be required for the high frequency clock to stabilise, the status of the HTO bit is checked. The amount of time required for high speed system oscillator stabilization depends upon which high speed system oscillator type is used.

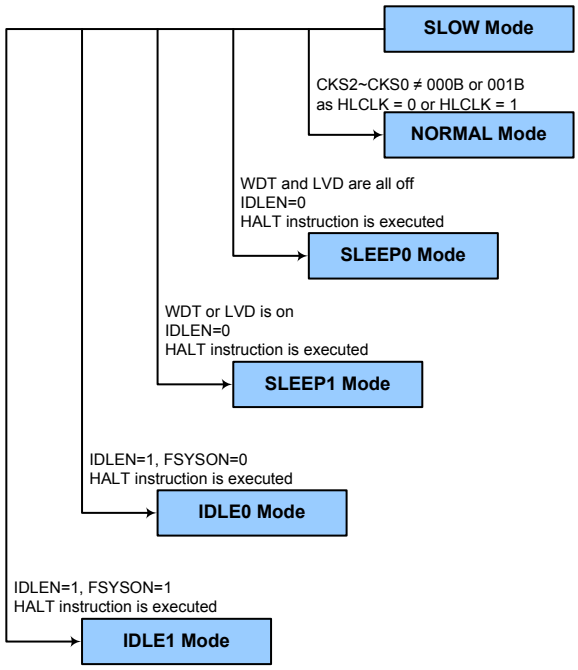

Entering the SLEEP0 Mode

There is only one way for the device to enter the SLEEP0 Mode and that is to execute the "HALT" instruction in the application program with the IDLEN bit in SMOD register equal to "0" and the WDT and LVD are both off. When this instruction is executed under the conditions described above, the following will occur:

- The system clock and the f_{SUB} clock will be stopped and the application program will stop at the "HALT" instruction.
- The Data Memory contents and registers will maintain their present condition.
- The WDT will be cleared and stopped.
- The I/O ports will maintain their present conditions.
- In the status register, the Power Down flag, PDF, will be set and the Watchdog time-out flag, TO, will be cleared.

Entering the SLEEP1 Mode

There is only one way for the device to enter the SLEEP1 Mode and that is to execute the "HALT" instruction in the application program with the IDLEN bit in SMOD register equal to "0" and the WDT or LVD is on. When this instruction is executed under the conditions described above, the following will occur:

- The system clock will be stopped and the application program will stop at the "HALT" instruction but the WDT or LVD will remain with the clock source coming with the f_{SUB} clock.
- The Data Memory contents and registers will maintain their present condition.
- The WDT will be cleared and resume counting if the WDT is enabled.
- The I/O ports will maintain their present conditions.
- In the status register, the Power Down flag, PDF, will be set and the Watchdog time-out flag, TO, will be cleared.

Entering the IDLE0 Mode

There is only one way for the device to enter the IDLE0 Mode and that is to execute the "HALT" instruction in the application program with the IDLEN bit in SMOD register equal to "1" and the FSYSON bit in CTRL register equal to "0". When this instruction is executed under the conditions described above, the following will occur:

- The system clock will be stopped and the application program will stop at the "HALT" instruction, but the low frequency f_{SUB} clock will be on.
- The Data Memory contents and registers will maintain their present condition.
- The WDT will be cleared and resume counting if the WDT is enabled.
- The I/O ports will maintain their present conditions as it is enabled.
- In the status register, the Power Down flag, PDF, will be set and the Watchdog time-out flag, TO, will be cleared.

Entering the IDLE1 Mode

There is only one way for the device to enter the IDLE1 Mode and that is to execute the "HALT" instruction in the application program with the IDLEN bit in SMOD register equal to "1" and the FSYSON bit in CTRL register equal to "1". When this instruction is executed under the conditions described above, the following will occur:

- The system clock and the low frequency f_{SUB} will be on and the application program will stop at the "HALT" instruction.
- The Data Memory contents and registers will maintain their present condition.
- The WDT will be cleared and resume counting as it is enabled.
- The I/O ports will maintain their present conditions if the WDT is enabled.
- In the status register, the Power Down flag, PDF, will be set and the Watchdog time-out flag, TO, will be cleared.

Standby Current Considerations

As the main reason for entering the SLEEP or IDLE Mode is to keep the current consumption of the device to as low a value as possible, perhaps only in the order of several micro-amps except in the IDLE1 Mode, there are other considerations which must also be taken into account by the circuit designer if the power consumption is to be minimised. Special attention must be made to the I/O pins on the device. All high-impedance input pins must be connected to either a fixed high or low level as any floating input pins could create internal oscillations and result in increased current consumption. This also applies to devices which have different package types, as there may be unbonbed pins. These must either be setup as outputs or if setup as inputs must have pull-high resistors connected.

Care must also be taken with the loads, which are connected to I/O pins, which are setup as outputs. These should be placed in a condition in which minimum current is drawn or connected only to external circuits that do not draw current, such as other CMOS inputs. In the IDLE1 Mode the system oscillator is on, if the system oscillator is from the high speed system oscillator, the additional standby current will also be perhaps in the order of several hundred micro-amps.

Wake-up

To minimise power consumption the device can enter the SLEEP or any IDLE Mode, where the CPU will be switched off. However, when the device is woken up again, it will take a considerable time for the original system oscillator to restart, stabilise and allow normal operation to resume.

After the system enters the SLEEP or IDLE Mode, it can be woken up from one of various sources listed as follows:

- An external falling edge on Port A
- A system interrupt
- A WDT overflow

When the device executes the "HALT" instruction, it will enter the IDLE or SLEEP mode and the PDF flag will be set high. The PDF flag is cleared to 0 if the device experiences a system power-up or executes the clear Watchdog Timer instruction.

If the system is woken up by a WDT overflow, a Watchdog Timer Time-out reset will be initiated and the TO flag will be set to 1. The TO flag is set high if a WDT time-out occurs, and causes a wake-up that only resets the Program Counter and Stack Pointer, the other flags remain in their original status.

Each pin on Port A can be setup using the PAWU register to permit a negative transition on the pin to wake-up the system. When a Port A pin wake-up occurs, the program will resume execution at the instruction following the "HALT" instruction. If the system is woken up by an interrupt, then two possible situations may occur. The first is where the related interrupt is disabled or the interrupt is enabled but the stack is full, in which case the program will resume execution at the instruction following the "HALT" instruction. In this situation, the interrupt which woke-up the device will not be immediately serviced, but will rather be serviced later when the related interrupt is finally enabled or when a stack level becomes free. The other situation is where the related interrupt is enabled and the stack is not full, in which case the regular interrupt response takes place. If an interrupt request flag is set high before entering the SLEEP or IDLE Mode, the wake-up function of the related interrupt will be disabled.

Watchdog Timer

The Watchdog Timer is provided to prevent program malfunctions or sequences from jumping to unknown locations, due to certain uncontrollable external events such as electrical noise.

Watchdog Timer Clock Source

The Watchdog Timer clock source is provided by the internal f_S clock which is in turn supplied by the LIRC oscillator. The Watchdog Timer source clock is then subdivided by a ratio of 2^8 to 2^{18} to give longer timeouts, the actual value being chosen using the WS2~WS0 bits in the WDTC register. The LIRC internal oscillator has an approximate period of 32kHz at a supply voltage of 5V. However, it should be noted that this specified internal clock period can vary with V_{DD}, temperature and process variations.

Watchdog Timer Control Register

A single register, WDTC, controls the required timeout period as well as the enable/disable operation.

- **WDTC Register**

Bit	7	6	5	4	3	2	1	0
Name	WE4	WE3	WE2	WE1	WE0	WS2	WS1	WS0
R/W	R/W	R/W	R/W	R/W	R/W	R/W	R/W	R/W
POR	0	1	0	1	0	0	1	1

Bit 7~3 **WE4~WE0**: WDT function enable/disable control
10101: Disable
01010: Enable
Others: Reset MCU

When these bits are changed by the environmental noise or software setting to reset the microcontroller, the reset operation will be activated after a delay time, t_{SRESET} and the WRF bit in the CTRL register will be set high.

Bit 2~0 **WS2~WS0**: WDT time-out period selection
000: $2^8/f_S$
001: $2^{10}/f_S$
010: $2^{12}/f_S$
011: $2^{14}/f_S$
100: $2^{15}/f_S$
101: $2^{16}/f_S$
110: $2^{17}/f_S$
111: $2^{18}/f_S$

These three bits determine the division ratio of the Watchdog Timer source clock, which in turn determines the timeout period.

- **CTRL Register**

Bit	7	6	5	4	3	2	1	0
Name	FSYSON	—	—	—	—	LVRF	LRF	WRF
R/W	R/W	—	—	—	—	R/W	R/W	R/W
POR	0	—	—	—	—	x	0	0

"x": unknown

Bit 7 **FSYSON**: f_{SYS} Control in IDLE Mode
Described elsewhere.

Bit 6~3 Unimplemented, read as "0"

Bit 2 **LVRF**: LVR function reset flag
Described elsewhere.

Bit 1 **LRF**: LVRC Control register software reset flag
Described elsewhere.

Bit 0 **WRF**: WDTC Control register software reset flag
0: Not occur
1: Occurred
This bit is set high by the WDT Control register software reset and cleared by the application program. Note that this bit can only be cleared to zero by the application program.

Watchdog Timer Operation

The Watchdog Timer operates by providing a device reset when its timer overflows. This means that in the application program and during normal operation the user has to strategically clear the Watchdog Timer before it overflows to prevent the Watchdog Timer from executing a reset. This is done using the clear watchdog instructions. If the program malfunctions for whatever reason, jumps to an unknown location, or enters an endless loop, these clear instructions will not be executed in the correct manner, in which case the Watchdog Timer will overflow and reset the device. With regard to the Watchdog Timer enable/disable function, there are five bits, WE4~WE0, in the WDTC register to offer enable/disable and reset control of the Watchdog Timer.The WE4~WE0 values can determine which mode the WDT operates in. The WDT function will be disabled when the WE4~WE0 bits are set to a value of 10101B. The WDT function will be enabled if the WE4~WE0 bits value is equal to 01010B. If the WE4~WE0 bits are set to any other values except 01010B and 10101B by the environmental noise or software setting, it will reset the device after a delay time, t_{SRESET}. After power on these bits will have the value of 01010B.

WE4 ~ WE0 Bits	WDT Function
10101B	Disable
01010B	Enable
Any other values	Reset MCU

Watchdog Timer Enable/Disable Control

Under normal program operation, a Watchdog Timer time-out will initialise a device reset and set the status bit TO. However, if the system is in the SLEEP or IDLE Mode, when a Watchdog Timer time-out occurs, the TO bit in the status register will be set high and only the Program Counter and Stack Pointer will be reset. Three methods can be adopted to clear the contents of the Watchdog Timer. The first is a WDT reset, which means a certain value except 01010B and 10101B written into the WE4~WE0 bit filed, the second is using the Watchdog Timer software clear instructions and the third is via a HALT instruction.

There is only one method of using software instruction to clear the Watchdog Timer. That is to use the single "CLR WDT" instruction to clear the WDT.

The maximum time out period is when the 2^{18} division ratio is selected. As an example, with a 32kHz LIRC oscillator as its source clock, this will give a maximum watchdog period of around 8 second for the 2^{18} division ratio, and a minimum timeout of 8ms for the 2^{8} division ration.

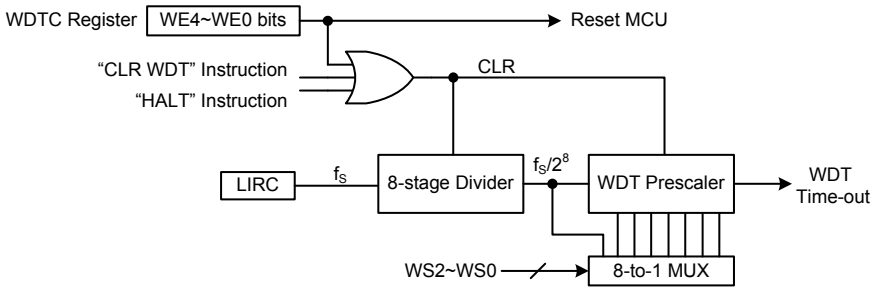

Watchdog Timer

Reset and Initialisation

A reset function is a fundamental part of any microcontroller ensuring that the device can be set to some predetermined condition irrespective of outside parameters. The most important reset condition is after power is first applied to the microcontroller. In this case, internal circuitry will ensure that the microcontroller, after a short delay, will be in a well defined state and ready to execute the first program instruction. After this power-on reset, certain important internal registers will be set to defined states before the program commences. One of these registers is the Program Counter, which will be reset to zero forcing the microcontroller to begin program execution from the lowest Program Memory address.

Another type of reset is when the Watchdog Timer overflows and resets the microcontroller. All types of reset operations result in different register conditions being setup. Another reset exists in the form of a Low Voltage Reset, LVR, where a full reset is implemented in situations where the power supply voltage falls below a certain threshold.

Reset Functions

There are several ways in which a microcontroller reset can occur, through events occurring internally:

Power-on Reset

The most fundamental and unavoidable reset is the one that occurs after power is first applied to the microcontroller. As well as ensuring that the Program Memory begins execution from the first memory address, a power-on reset also ensures that certain other registers are preset to known conditions. All the I/O port and port control registers will power up in a high condition ensuring that all pins will be first set to inputs.

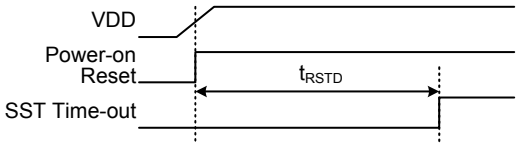

Power-On Reset Timing Chart

Low Voltage Reset – LVR

The microcontroller contains a low voltage reset circuit in order to monitor the supply voltage of the device. The LVR function is always enabled in Normal and SLOW modes with a specific LVR voltage, V_{LVR}. If the supply voltage of the device drops to within a range of 0.9V~V_{LVR} such as might occur when changing the battery, the LVR will automatically reset the device internally and the LVRF bit in the CTRL register will also be set high. For a valid LVR signal, a low voltage, i.e., a voltage in the range between 0.9V~V_{LVR} must exist for greater than the value t_{LVR} specified in the LVD&LVR Electrical Characteristics table. If the low voltage state does not exceed this value, the LVR will ignore the low supply voltage and will not perform a reset function.

The actual V_{LVR} is defined by the LVS7~LVS0 bits in the LVRC register. If the LVS7~LVS0 bits are changed to any other value except some certain values defined in the LVRC register by the environmental noise, the LVR will reset the device after a delay time, t_{SRESET}. When this happens, the LRF bit in the CTRL register will be set high. After power on the register will have the value of 01010101B. Note that the LVR function will be automatically disabled when the device enters the IDLE or SLEEP mode.

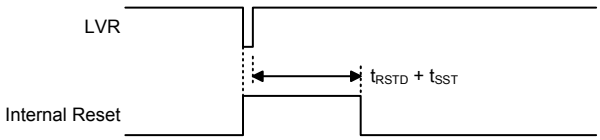

Low Voltage Reset Timing Chart

- **LVRC Register**

Bit	7	6	5	4	3	2	1	0
Name	LVS7	LVS6	LVS5	LVS4	LVS3	LVS2	LVS1	LVS0
R/W	R/W	R/W	R/W	R/W	R/W	R/W	R/W	R/W
POR	0	1	0	1	0	1	0	1

Bit 7 ~ 0 **LVS7 ~ LVS0**: LVR Voltage Select control
01010101: 2.1V
00110011: 2.55V
10011001: 3.15V
10101010: 3.8V
Other values: MCU reset – register is reset to POR value

When an actual low voltage condition occurs, an MCU reset will be generated. The reset operation will be activated after the low voltage condition keeps more than a t_{LVR} time. In this situation this register content will remain the same after such a reset occurs.

Any register value, other than the defined values above, will also result in the generation of an MCU reset. The reset operation will be activated after a delay time, t_{SRESET}. However in this situation this register contents will be reset to the POR value.

- **CTRL Register**

Bit	7	6	5	4	3	2	1	0
Name	FSYSON	—	—	—	—	LVRF	LRF	WRF
R/W	R/W	—	—	—	—	R/W	R/W	R/W
POR	0	—	—	—	—	x	0	0

"x": unknown

Bit 7 **FSYSON**: f_{SYS} Control in IDLE Mode
Described elsewhere

Bit 6 ~ 3 Unimplemented, read as "0"

Bit 2 **LVRF**: LVR function reset flag
0: Not occurred
1: Occurred

This bit is set high when a specific low voltage reset condition occurs. This bit can only be cleared to zero by application program.

Bit 1 **LRF**: LVRC control register software reset flag
0: Not occurred
1: Occurred

This bit is set high when the LVRC register contains any undefined LVR voltage register value. This in effect acts like a software reset function. This bit can only be cleared to zero by application program.

Bit 0 **WRF**: WDTC control register software reset flag
Described elsewhere

Watchdog Time-out Reset during Normal Operation

The Watchdog time-out Reset during normal operation is the same as a LVR reset except that the Watchdog time-out flag TO will be set high.

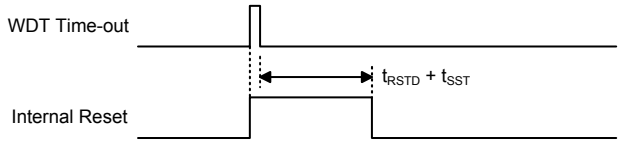

WDT Time-out Reset during Normal Operation Timing Chart

Watchdog Time-out Reset during SLEEP or IDLE Mode

The Watchdog time-out Reset during SLEEP or IDLE Mode is a little different from other kinds of reset. Most of the conditions remain unchanged except that the Program Counter and the Stack Pointer will be cleared to zero and the TO flag will be set high. Refer to the A.C. Characteristics for t_{SST} details.

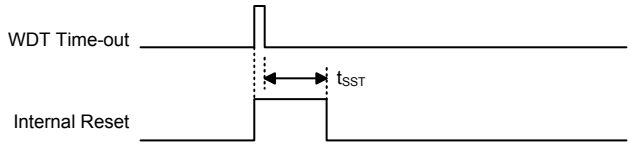

WDT Time-out Reset during SLEEP or IDLE Timing Chart

Reset Initial Conditions

The different types of reset described affect the reset flags in different ways. These flags, known as PDF and TO are located in the status register and are controlled by various microcontroller operations, such as the SLEEP or IDLE Mode function or Watchdog Timer. The reset flags are shown in the table:

TO	PDF	RESET Conditions
0	0	Power-on reset
u	u	LVR reset during normal operation
1	u	WDT time-out reset during NORMAL or SLOW Mode operation
1	1	WDT time-out reset during IDLE or SLEEP Mode operation

Note: "u" stands for unchanged

The following table indicates the way in which the various components of the microcontroller are affected after a power-on reset occurs.

Item	Condition After RESET
Program Counter	Reset to zero
Interrupts	All interrupts will be disabled
WDT	Clear after reset, WDT begins counting
Timer Modules	Timer Modules will be turned off
Input/Output Ports	I/O ports will be setup as inputs
Stack Pointer	Stack Pointer will point to the top of the stack

The different kinds of resets all affect the internal registers of the microcontroller in different ways. To ensure reliable continuation of normal program execution after a reset occurs, it is important to know what condition the microcontroller is in after a particular reset occurs. The following table describes how each type of reset affects each of the microcontroller internal registers.

Register	Power On Reset	WDT Time-out (Normal Operation)	WDT Time-out (SLEEP/IDLE)
MP0	xxxx xxxx	uuuu uuuu	uuuu uuuu
MP1	xxxx xxxx	uuuu uuuu	uuuu uuuu
BP	---- ---0	---- ---0	---- ---u
ACC	xxxx xxxx	uuuu uuuu	uuuu uuuu
PCL	0000 0000	0000 0000	0000 0000
TBLP	xxxx xxxx	uuuu uuuu	uuuu uuuu
TBLH	xxxx xxxx	uuuu uuuu	uuuu uuuu
TBHP	---- -xxx	---- -uuu	---- -uuu
STATUS	--00 xxxx	--1u uuuu	--11 uuuu
SMOD	000- 0011	000- 0011	uuu- uuuu
LVDC	--00 -000	--00 -000	--uu -uuu
INTEG	---- 0000	---- 0000	---- uuuu
INTC0	-000 0000	-000 0000	-uuu uuuu
INTC1	0000 0000	0000 0000	uuuu uuuu
INTC2	0000 0000	0000 0000	uuuu uuuu
MFI0	0000 0000	0000 0000	uuuu uuuu
MFI1	0000 0000	0000 0000	uuuu uuuu
MFI2	--00 --00	--00 --00	--uu --uu
PA	1111 1111	1111 1111	uuuu uuuu
PAC	1111 1111	1111 1111	uuuu uuuu
PAPU	0000 0000	0000 0000	uuuu uuuu
PAWU	0000 0000	0000 0000	uuuu uuuu
MFI3	--00 --00	--00 --00	--uu --uu
WDTC	0101 0011	0101 0011	uuuu uuuu
TBC	0011 -111	0011 -111	uuuu -uuu
EEA	---0 0000	---0 0000	---u uuuu
EED	0000 0000	0000 0000	uuuu uuuu
EEC	---- 0000	---- 0000	---- uuuu
FADJL	0000 0000	0000 0000	uuuu uuuu
FADJH	---- ---1	---- ---1	---- ---u
CTRL	0--- -x00	0--- -000	u--- -uuu
LVRC	0101 0101	0101 0101	uuuu uuuu
CTM0C0	0000 0000	0000 0000	uuuu uuuu
CTM0C1	0000 0000	0000 0000	uuuu uuuu
CTM0DL	0000 0000	0000 0000	uuuu uuuu
CTM0DH	---- --00	---- --00	---- --uu
CTM0AL	0000 0000	0000 0000	uuuu uuuu
CTM0AH	---- --00	---- --00	---- --uu
STMC0	0000 0000	0000 0000	uuuu uuuu
STMC1	0000 0000	0000 0000	uuuu uuuu
STMDL	0000 0000	0000 0000	uuuu uuuu
STMDH	---- --00	---- --00	---- --uu
STMAL	0000 0000	0000 0000	uuuu uuuu

Register	Power On Reset	WDT Time-out (Normal Operation)	WDT Time-out (SLEEP/IDLE)
STMAH	---- --00	---- --00	---- --uu
CTM1C0	0000 0000	0000 0000	uuuu uuuu
CTM1C1	0000 0000	0000 0000	uuuu uuuu
CTM1DL	0000 0000	0000 0000	uuuu uuuu
CTM1DH	---- --00	---- --00	---- --uu
CTM1AL	0000 0000	0000 0000	uuuu uuuu
CTM1AH	---- --00	---- --00	---- --uu
CTM2C0	0000 0000	0000 0000	uuuu uuuu
CTM2C1	0000 0000	0000 0000	uuuu uuuu
CTM2DL	0000 0000	0000 0000	uuuu uuuu
CTM2DH	---- --00	---- --00	---- --uu
CTM2AL	0000 0000	0000 0000	uuuu uuuu
CTM2AH	---- --00	---- --00	---- --uu
PC	---- --11	---- --11	---- --uu
PCC	---- --11	---- --11	---- --uu
PCPU	---- --00	---- --00	---- --uu
CTRL2	10-- --00	10-- --00	uu-- --uu
CTRL3	0000 0000	0000 0000	uuuu uuuu
CTRL4	0000 0000	0000 0000	uuuu uuuu
CTRL5	---- -000	---- -000	---- -uuu
PB	1111 1111	1111 1111	uuuu uuuu
PBC	1111 1111	1111 1111	uuuu uuuu
PBPU	0000 0000	0000 0000	uuuu uuuu
SLEWC0	---- --00	---- --00	---- --uu
SLEDC0	0000 0000	0000 0000	uuuu uuuu
SLEDC1	---- --00	---- --00	---- --uu
PTMC0	0000 0---	0000 0---	uuuu u---
PTMC1	0000 0000	0000 0000	uuuu uuuu
PTMDL	0000 0000	0000 0000	uuuu uuuu
PTMDH	---- --00	---- --00	---- --uu
PTMAL	0000 0000	0000 0000	uuuu uuuu
PTMAH	---- --00	---- --00	---- --uu
PTMRPL	0000 0000	0000 0000	uuuu uuuu
PTMRPH	---- --00	---- --00	---- --uu
OCVPC0	1100 1000	1100 1000	uuuu uuuu
OCVPC1	0000 --00	0000 --00	uuuu --uu
OCVPC2	-000 0000	-000 0000	-uuu uuuu
OCVPDA	0000 0000	0000 0000	uuuu uuuu
OCVPOCAL	0010 0000	0010 0000	uuuu uuuu
OCVPCCAL	0001 0000	0001 0000	uuuu uuuu
TKTMR	0000 0000	0000 0000	uuuu uuuu
TKC0	-000 0-00	-000 0-00	-uuu u-uu
TK16DL	0000 0000	0000 0000	uuuu uuuu
TK16DH	0000 0000	0000 0000	uuuu uuuu
TKC1	---- --11	---- --11	---- --uu
TKM016DL	0000 0000	0000 0000	uuuu uuuu
TKM016DH	0000 0000	0000 0000	uuuu uuuu

Register	Power On Reset	WDT Time-out (Normal Operation)	WDT Time-out (SLEEP/IDLE)
TKM0ROL	0000 0000	0000 0000	uuuu uuuu
TKM0ROH	---- --00	---- --00	---- --uu
TKM0C0	0000 0000	0000 0000	uuuu uuuu
TKM0C1	0-00 0000	0-00 0000	u-uu uuuu
SADOL	xxxx ----	xxxx ----	uuuu ---- (ADRFS=0)
			uuuu uuuu (ADRFS=1)
SADOH	xxxx xxxx	xxxx xxxx	uuuu uuuu (ADRFS=0)
			---- uuuu (ADRFS=1)
SADC0	0000 0000	0000 0000	uuuu uuuu
SADC1	000- -000	000- -000	uuu- -uuu
ACERL	---- 0000	---- 0000	---- uuuu

Note: "-" stands for unimplemented
"u" stands for unchanged
"x" stands for unknown

Input/Output Ports

Holtek microcontrollers offer considerable flexibility on their I/O ports. With the input or output designation of every pin fully under user program control, pull-high selections for all ports and wake-up selections on certain pins, the user is provided with an I/O structure to meet the needs of a wide range of application possibilities.

The device provides bidirectional input/output lines labeled with port names PA~PC. These I/O ports are mapped to the RAM Data Memory with specific addresses as shown in the Special Purpose Data Memory table. All of these I/O ports can be used for input and output operations. For input operation, these ports are non-latching, which means the inputs must be ready at the T2 rising edge of instruction "MOV A, [m]", where m denotes the port address. For output operation, all the data is latched and remains unchanged until the output latch is rewritten.

Register Name	Bit							
	7	6	5	4	3	2	1	0
PA	PA7	PA6	PA5	PA4	PA3	PA2	PA1	PA0
PAC	PAC7	PAC6	PAC5	PAC4	PAC3	PAC2	PAC1	PAC0
PAPU	PAPU7	PAPU6	PAPU5	PAPU4	PAPU3	PAPU2	PAPU1	PAPU0
PAWU	PAWU7	PAWU6	PAWU5	PAWU4	PAWU3	PAWU2	PAWU1	PAWU0
PB	PB7	PB6	PB5	PB4	PB3	PB2	PB1	PB0
PBC	PBC7	PBC6	PBC5	PBC4	PBC3	PBC2	PBC1	PBC0
PBPU	PBPU7	PBPU6	PBPU5	PBPU4	PBPU3	PBPU2	PBPU1	PBPU0
PC	—	—	—	—	—	—	PC1	PC0
PCC	—	—	—	—	—	—	PCC1	PCC0
PCPU	—	—	—	—	—	—	PCPU1	PCPU0

I/O Logic Function Register List

Pull-high Resistors

Many product applications require pull-high resistors for their switch inputs usually requiring the use of an external resistor. To eliminate the need for these external resistors, all I/O pins, when configured as an input have the capability of being connected to an internal pull-high resistor. These pull-high resistors are selected using registers PAPU~PCPU, and are implemented using weak PMOS transistors.

Note that only when the I/O ports are configured as digital input or NMOS output, the internal pull-high functions can be enabled using the relevant pull-high control registers. Otherwise the pull-high resistors cannot be enabled.

- **PAPU Register**

Bit	7	6	5	4	3	2	1	0
Name	PAPU7	PAPU6	PAPU5	PAPU4	PAPU3	PAPU2	PAPU1	PAPU0
R/W	R/W	R/W	R/W	R/W	R/W	R/W	R/W	R/W
POR	0	0	0	0	0	0	0	0

Bit 7 ~ 0 **PAPU7~PAPU0**: Port A Pin Pull-high Control
0: Disable
1: Enable

- **PBPU Register**

Bit	7	6	5	4	3	2	1	0
Name	PBPU7	PBPU6	PBPU5	PBPU4	PBPU3	PBPU2	PBPU1	PBPU0
R/W	R/W	R/W	R/W	R/W	R/W	R/W	R/W	R/W
POR	0	0	0	0	0	0	0	0

Bit 7 ~ 0 **PBPU7~PBPU0**: Port B Pin Pull-high Control
0: Disable
1: Enable

- **PCPU Register**

Bit	7	6	5	4	3	2	1	0
Name	—	—	—	—	—	—	PCPU1	PCPU0
R/W	—	—	—	—	—	—	R/W	R/W
POR	—	—	—	—	—	—	0	0

Bit 7~2 Unimplemented, read as "0"

Bit 1~0 **PCPU1~PCPU0**: Port C Pin Pull-high Control
0: Disable
1: Enable

Port A Wake-up

The HALT instruction forces the microcontroller into the SLEEP or IDLE Mode which preserves power, a feature that is important for battery and other low-power applications. Various methods exist to wake-up the microcontroller, one of which is to change the logic condition on one of the Port A pins from high to low. This function is especially suitable for applications that can be woken up via external switches. Each pin on Port A can be selected individually to have this wake-up feature using the PAWU register.

Note that only when the Port A pins are configured as general purpose I/Os and the device is in the HALT status, the Port A wake-up functions can be enabled using the relevant bits in the PAWU register. In other conditions, the wake-up functions are disabled.

- **PAWU Register**

Bit	7	6	5	4	3	2	1	0
Name	PAWU7	PAWU6	PAWU5	PAWU4	PAWU3	PAWU2	PAWU1	PAWU0
R/W	R/W	R/W	R/W	R/W	R/W	R/W	R/W	R/W
POR	0	0	0	0	0	0	0	0

Bit 7 ~ 0 **PAWU7~PAWU0**: Port A Pin Wake-up Control
0: Disable
1: Enable

I/O Port Control Registers

Each I/O port has its own control register known as PAC~PCC, to control the input/output configuration. With this control register, each CMOS output or input can be reconfigured dynamically under software control. Each pin of the I/O ports is directly mapped to a bit in its associated port control register. For the I/O pin to function as an input, the corresponding bit of the control register must be written as a "1". This will then allow the logic state of the input pin to be directly read by instructions. When the corresponding bit of the control register is written as a "0", the I/O pin will be setup as a CMOS output. If the pin is currently setup as an output, instructions can still be used to read the output register. However, it should be noted that the program will in fact only read the status of the output data latch and not the actual logic status of the output pin.

- **PAC Register**

Bit	7	6	5	4	3	2	1	0
Name	PAC7	PAC6	PAC5	PAC4	PAC3	PAC2	PAC1	PAC0
R/W	R/W	R/W	R/W	R/W	R/W	R/W	R/W	R/W
POR	1	1	1	1	1	1	1	1

Bit 7 ~ 0 **PAC7~PAC0**: Port A Pin Input/Output Type Selection
0: Output
1: Input

- **PBC Register**

Bit	7	6	5	4	3	2	1	0
Name	PBC7	PBC6	PBC5	PBC4	PBC3	PBC2	PBC1	PBC0
R/W	R/W	R/W	R/W	R/W	R/W	R/W	R/W	R/W
POR	1	1	1	1	1	1	1	1

Bit 7~0 **PBC7~PBC0**: Port B Pin Input/Output Type Selection
0: Output
1: Input

- **PCC Register**

Bit	7	6	5	4	3	2	1	0
Name	—	—	—	—	—	—	PCC1	PCC0
R/W	—	—	—	—	—	—	R/W	R/W
POR	—	—	—	—	—	—	1	1

Bit 7~2 Unimplemented, read as "0"

Bit 1~0 **PCC1~PCC0**: Port C Pin Input/Output Type Selection
0: Output
1: Input

Slew Rate Control

The PB5 port can be setup to have a choice of various slew rate using the SLEWC0 register. Refer to the Slew Rate Control Characteristics section to obtain the exact value.

- **SLEWC0 Register**

Bit	7	6	5	4	3	2	1	0
Name	—	—	—	—	—	—	SLEWC01	SLEWC00
R/W	—	—	—	—	—	—	R/W	R/W
POR	—	—	—	—	—	—	0	0

Bit 7~2 Unimplemented, read as "0"

Bit 1~0 **SLEWC01~ SLEWC00**: PB5 output slew rate selection
00: Slew rate = Level 0
01: Slew rate = Level 1
10: Slew rate = Level 2
11: Slew rate = Level 3

Note: Users should refer to the Slew Rate Control Characteristics section to obtain the exact value for different applications.

Source Current Selection

Each pin in this device can be configured with different output source current which is selected by the corresponding source current selection bits. These source current selection bits are available when the corresponding pin is configured as a CMOS output. Otherwise, these selection bits have no effect. Users should refer to the D.C. Characteristics section to obtain the exact value for different applications.

Register Name	Bit							
	7	6	5	4	3	2	1	0
SLEDC0	SLEDC07	SLEDC06	SLEDC05	SLEDC04	SLEDC03	SLEDC02	SLEDC01	SLEDC00
SLEDC1	—	—	—	—	—	—	SLEDC11	SLEDC10

I/O Port Source Current Selection Register List

- **SLEDC0 Register**

Bit	7	6	5	4	3	2	1	0
Name	SLEDC07	SLEDC06	SLEDC05	SLEDC04	SLEDC03	SLEDC02	SLEDC01	SLEDC00
R/W	R/W	R/W	R/W	R/W	R/W	R/W	R/W	R/W
POR	0	0	0	0	0	0	0	0

Bit 7~6 **SLEDC07~SLEDC06**: PB7, PB6, PB4 source current selection
00: Source current = Level 0 (Min.)
01: Source current = Level 1
10: Source current = Level 2
11: Source current = Level 3 (Max.)

Bit 5~4 **SLEDC05~SLEDC04**: PB3~PB0 source current selection
00: Source current = Level 0 (Min.)
01: Source current = Level 1
10: Source current = Level 2
11: Source current = Level 3 (Max.)

Bit 3~2 **SLEDC03~SLEDC02**: PA7~PA4 source current selection
00: Source current = Level 0 (Min.)
01: Source current = Level 1
10: Source current = Level 2
11: Source current = Level 3 (Max.)

Bit 1~0 **SLEDC01~SLEDC00**: PA3~PA0 source current selection
00: Source current = Level 0 (Min.)
01: Source current = Level 1
10: Source current = Level 2
11: Source current = Level 3 (Max.)
Note: Users should refer to the D.C. Characteristics section to obtain the exact value for different applications

- **SLEDC1 Register**

Bit	7	6	5	4	3	2	1	0
Name	—	—	—	—	—	—	SLEDC11	SLEDC10
R/W	—	—	—	—	—	—	R/W	R/W
POR	—	—	—	—	—	—	0	0

Bit 7~2 Unimplemented, read as "0"

Bit 1~0 **SLEDC11~SLEDC10**: PC1, PC0 source current selection
00: Source current = Level 0 (Min.)
01: Source current = Level 1
10: Source current = Level 2
11: Source current = Level 3 (Max.)
Note: Users should refer to the D.C. Characteristics section to obtain the exact value for different applications

Pin-shared Function

The flexibility of the microcontroller range is greatly enhanced by the use of pins that have more than one function. Limited numbers of pins can force serious design constraints on designers but by supplying pins with multi-functions, many of these difficulties can be overcome. For these pins, the desired function of the multi-function I/O pins is selected by a series of registers via the application program control.

Pin-shared Function Selection Registers

The limited number of supplied pins in a package can impose restrictions on the amount of functions a certain device can contain. However by allowing the same pins to share several different functions and providing a means of function selection, a wide range of different functions can be incorporated into even relatively small package sizes. The device includes the CTRL3, CTRL4 and CTRL5 registers which can select the desired functions of the multi-function pin-shared pins.

The most important point to note is to make sure that the desired pin-shared function is properly selected and also deselected. To select the desired pin-shared function, the pin-shared function should first be correctly selected using the corresponding pin-shared control register. After that the corresponding peripheral functional setting should be configured and then the peripheral function can be enabled. However, a special point must be noted for some digital input pins, such as INT, xTCKn etc, which share the same pin-shared control configuration with their corresponding general purpose I/O functions when setting the relevant pin-shared control bit fields. To select these pin functions, in addition to the necessary pin-shared control and peripheral functional setup aforementioned, they must also be setup as an input by setting the corresponding bit in the I/O port control register. To correctly deselect the pin-shared function, the peripheral function should first be disabled and then the corresponding pin-shared function control register can be modified to select other pin-shared functions.

Register Name	Bit							
	7	6	5	4	3	2	1	0
CTRL3	IOCN7	IOCN6	IOCN5	IOCN4	IOCN3	IOCN2	IOCN1	IOCN0
CTRL4	IOCN15	IOCN14	IOCN13	IOCN12	IOCN11	IOCN10	IOCN9	IOCN8
CTRL5	—	—	—	—	—	IOCN18	IOCN17	IOCN16

Pin-shared Function Selection Register List

- **CTRL3 Register**

Bit	7	6	5	4	3	2	1	0
Name	IOCN7	IOCN6	IOCN5	IOCN4	IOCN3	IOCN2	IOCN1	IOCN0
R/W	R/W	R/W	R/W	R/W	R/W	R/W	R/W	R/W
POR	0	0	0	0	0	0	0	0

Bit 7 **IOCN7**: PA7 pin function selection
0: PA7/PTCK
1: KEY1

Bit 6 **IOCN6**: PA6 pin function selection
0: PA6
1: CTP1

Bit 5 **IOCN5**: PA5 pin function selection
0: PA5/INT1/STCK
1: OCVPCI

Bit 4~3 **IOCN4~IOCN3**: PA4 pin function selection
00: PA4
01: STP
10: KEY2
11: KEY2

Bit 2 **IOCN2**: PA2 pin function selection
0: PA2
1: CTP2

Bit 1~0 **IOCN1~IOCN0**: PA1 pin function selection
00: PA1
01: CTP0
10: KEY3
11: KEY3

- **CTRL4 Register**

Bit	7	6	5	4	3	2	1	0
Name	IOCN15	IOCN14	IOCN13	IOCN12	IOCN11	IOCN10	IOCN9	IOCN8
R/W	R/W	R/W	R/W	R/W	R/W	R/W	R/W	R/W
POR	0	0	0	0	0	0	0	0

Bit 7~6 **IOCN15~IOCN14**: PB3 pin function selection
00: PB3
01: PB3
10: OCVPAI0
11: OCVPAI0

Only when the ACE3 bit in the ACERL register is zero, these two bits selection is valid. If the ACE3 bit is 1, the PB3 pin is always used as the A/D converter AN3 input function.

Bit 5~4 **IOCN13~IOCN12**: PB2 pin function selection
00: PB2
01: PB2
10: OCVPAI0
11: OCVPAI0

Only when the ACE2 bit in the ACERL register is zero, these two bits selection is valid. If the ACE2 bit is 1, the PB2 pin is always used as the A/D converter AN2 input function.

Bit 3~2 **IOCN11~IOCN10**: PB1 pin function selection
00: PB1
01: PB1
10: OCVPAI0
11: OCVPAI0

Only when the ACE1 bit in the ACERL register is zero, these two bits selection is valid. If the ACE1 bit is 1, the PB1 pin is always used as the A/D converter AN1 input function.

Bit 1~0 **IOCN9~IOCN8**: PB0 pin function selection
00: PB0
01: PB0
10: OCVPAI0
11: OCVPAI0

Only when the ACE0 bit in the ACERL register is zero, these two bits selection is valid. If the ACE0 bit is 1, the PB0 pin is always used as the A/D converter AN0 input function.

- **CTRL5 Register**

Bit	7	6	5	4	3	2	1	0
Name	—	—	—	—	—	IOCN18	IOCN17	IOCN16
R/W	—	—	—	—	—	R/W	R/W	R/W
POR	—	—	—	—	—	0	0	0

Bit 7~3 Unimplemented, read as "0"

Bit 2 **IOCN18**: PB5 pin function selection
0: PB5
1: PTP

Bit 1 **IOCN17**: PA3 pin function selection
0: PA3/INT0/CTCK0
1: KEY4

Bit 0 **IOCN16**: PB4 pin function selection
0: PB4/CTCK1
1: VREF

I/O Pin Structures

The accompanying diagrams illustrate the internal structures of some generic I/O pin types. As the exact logical construction of the I/O pin will differ from these drawings, they are supplied as a guide only to assist with the functional understanding of the I/O pins. The wide range of pin-shared structures does not permit all types to be shown.

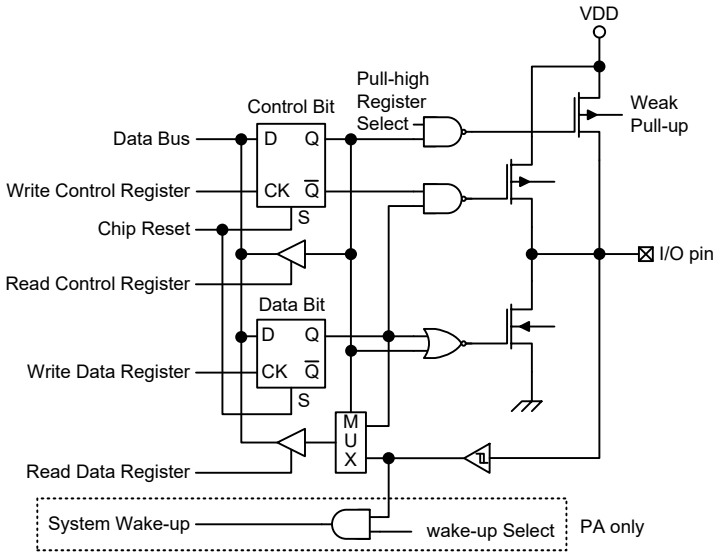

Logic Function Input/Output Structure

Programming Considerations

Within the user program, one of the first things to consider is port initialisation. After a reset, all of the I/O data and port control registers will be set high. This means that all I/O pins will default to an input state, the level of which depends on the other connected circuitry and whether pull-high selections have been chosen. If the port control registers, PAC~PCC, are then programmed to setup some pins as outputs, these output pins will have an initial high output value unless the associated port data registers, PA~PC, are first programmed. Selecting which pins are inputs and which are outputs can be achieved byte-wide by loading the correct values into the appropriate port control register or by programming individual bits in the port control register using the "SET [m].i" and "CLR [m].i" instructions. Note that when using these bit control instructions, a read-modify-write operation takes place. The microcontroller must first read in the data on the entire port, modify it to the required new bit values and then rewrite this data back to the output ports.

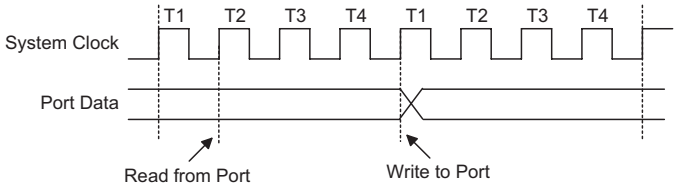

Read/Write Timing

Port A has the additional capability of providing wake-up functions. When the device is in the SLEEP or IDLE Mode, various methods are available to wake the device up. One of these is a high to low transition of any of the Port A pins. Single or multiple pins on Port A can be setup to have this function.

Timer Modules – TM

One of the most fundamental functions in any microcontroller device is the ability to control and measure time. To implement time related functions the device includes several Timer Modules, abbreviated to the name TM. The TMs are multi-purpose timing units and serve to provide operations such as Timer/Counter, Input Capture, Compare Match Output and Single Pulse Output as well as being the functional unit for the generation of PWM signals. Each of the TMs has two individual interrupts. The addition of input and output pins for each TM ensures that users are provided with timing units with a wide and flexible range of features.

The common features of the different TM types are described here with more detailed information provided in the individual Compact, Standard and Periodic TM sections.

Introduction

The device contains three 10-bit Compact TMs, named CTM0~CTM2, a 10-bit Standard TM named STM and a 10-bit Periodic TM named PTM. Although similar in nature, the different TM types vary in their feature complexity. The common features to the Compact, Standard and Periodic TMs will be described in this section and the detailed operation will be described in corresponding sections. The main features and differences between the three types of TM are summarised in the accompanying table.

Function	CTM	STM	PTM
Timer/Counter	√	√	√
Input Capture	—	√	√
Compare Match Output	√	√	√
PWM Channel	1	1	1
Single Pulse Output	—	1	1
PWM Alignment	Edge	Edge	Edge
PWM Adjustment Period & Duty	Duty or Period	Duty or Period	Duty or Period

TM Function Summary

CTM	STM	PTM
10-bit CTM0 10-bit CTM1 10-bit CTM2	10-bit STM	10-bit PTM

TM Name/Type Reference

TM Operation

The three different types of TMs offer a diverse range of functions, from simple timing operations to PWM signal generation. The key to understanding how the TM operates is to see it in terms of a free running counter whose value is then compared with the value of pre-programmed internal comparators. When the free running counter has the same value as the pre-programmed comparator, known as a compare match situation, a TM interrupt signal will be generated which can clear the counter and perhaps also change the condition of the TM output pin. The internal TM counter is driven by a user selectable clock source, which can be an internal clock or an external pin.

TM Clock Source

The clock source which drives the main counter in the TM can originate from various sources. The selection of the required clock source is implemented using the xTnCK2~xTnCK0 bits in the xTMn control registers, where "x" can stand for C, S or P Type TM and "n" is the specific TM serial number. For the CTM0~CTM2 and the STM, The clock source can be a ratio of either the system clock f_{SYS} or the internal high clock f_H, the f_{SUB} clock source or the external xTCKn pin. For the PTM, a dedicated oscillator which supporting fine-adjustment and enable/disable control is provided to be used as the PTM clock input.The f_{SUB} clock source or the external PTCK pin input signals also can be the PTM clock source. The external pin clock source is used to allow an external signal to drive the TM as an external clock source or for event counting.

TM Interrupts

The Compact, Standard and Periodic type TMs each has two internal interrupts, the internal comparator A or comparator P, which generate a TM interrupt when a compare match condition occurs. When a TM interrupt is generated, it can be used to clear the counter and also to change the state of the TM output pin.

TM External Pins

Each of the TMs, irrespective of what type, has one TM input pin, with the label xTCKn. The TM input pin, xTCKn, is essentially a clock source for the TM and is selected using the xTnCK2~xTnCK0 bits in the xTMnC0 register. This xTCKn input pin allows an external clock source to drive the internal TM. The TM input pin can be chosen to have either a rising or falling active edge. The PTCK pin is also used as the external trigger input pin in single pulse output mode for the PTM.

For the STM and PTM, there is another input pin xTP, which also can be the STM or PTM0 output pin. The STP or PTP pin is the capture input pin whose active edge can be a rising edge, a falling edge or both rising and falling edges. The active edge transition type is selected using the xTIO1~xTIO0 bits in the xTMC1 register. For the PTM, there is another capture input, PTCK, for PTM capture input mode, which can be used as the external trigger input source except for the PTP pin.

The TMs each have one output pin, named xTPn. The TM output pin can be selected using the corresponding pin-shared function selection bits described in the Pin-shared Function section. When the TM is in the Compare Match Output Mode, these pins can be controlled by the TM to switch to a high or low level or to toggle when a compare match situation occurs. The external xTPn output pin is also the pin where the TM generates the PWM output waveform.

As the TM input or output pins are pin-shared with other functions, the TM external pin function must first be setup using registers. The corresponding bits in the Pin-shared Function Selection Registers determines if its associated pin is to be used as an external TM pin or if it is to have another function. The details of the pin-shared function selection are described in the pin-shared function section.

CTMn (n=0~2)		STM		PTM	
Input	Output	Input	Output	Input	Output
CTCKn	CTPn	STCK/STP	STP	PTCK/PTP	PTP

TM External Pins

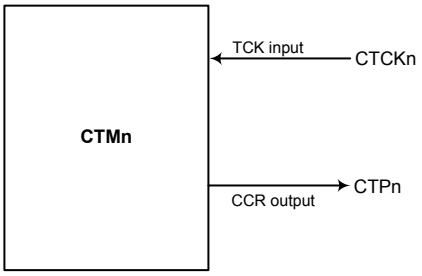

CTMn Function Pin Block Diagram (n=0~2)

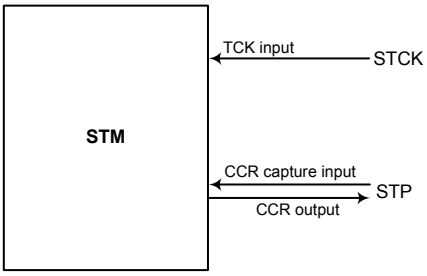

STM Function Pin Block Diagram

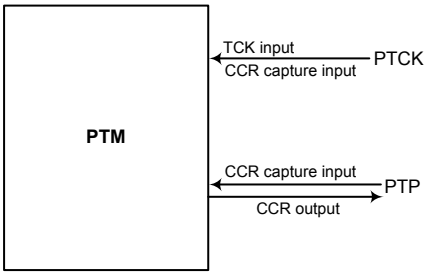

PTMn Function Pin Block Diagram

Programming Considerations

The TM Counter Registers and the Capture/Compare CCRA and CCRP registers, being 10-bit, all have a low and high byte structure. The high bytes can be directly accessed, but as the low bytes can only be accessed via an internal 8-bit buffer, reading or writing to these register pairs must be carried out in a specific way. The important point to note is that data transfer to and from the 8-bit buffer and its related low byte only takes place when a write or read operation to its corresponding high byte is executed.

As the CCRA and CCRP registers are implemented in the way shown in the following diagram and accessing these registers is carried out in a specific way described above, it is recommended to use the "MOV" instruction to access the CCRA and CCRP low byte registers, named xTMnAL and PTMRPL, in the following access procedures. Accessing the CCRA or CCRP low byte register without following these access procedures will result in unpredictable values.

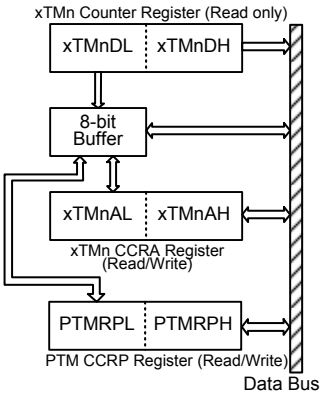

The following steps show the read and write procedures:

- Writing Data to CCRA or CCRP
  - Step 1. Write data to Low Byte xTMnAL or PTMRPL
    – note that here data is only written to the 8-bit buffer.
  - Step 2. Write data to High Byte xTMnAH or PTMRPH
    – here data is written directly to the high byte registers and simultaneously data is latched from the 8-bit buffer to the Low Byte registers.
- Reading Data from the Counter Registers and CCRA or CCRP
  - Step 1. Read data from the High Byte xTMnDH, xTMnAH or PTMRPH
    – here data is read directly from the High Byte registers and simultaneously data is latched from the Low Byte register into the 8-bit buffer.
  - Step 2. Read data from the Low Byte xTMnDL, xTMnAL or PTMRPL
    – this step reads data from the 8-bit buffer.

Compact Type TM – CTM

Although the simplest form of the TM types, the Compact TM type still contains three operating modes, which are Compare Match Output, Timer/Event Counter and PWM Output modes. The Compact TM can be controlled with an external input pin and can drive one external output pin.

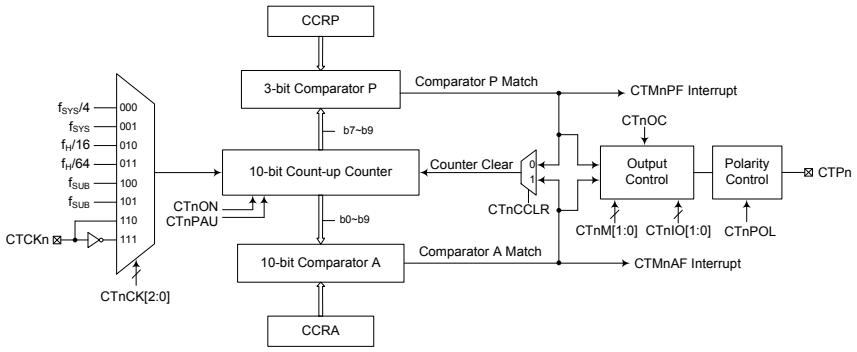

Note: As the CTMn external pins are pin-shared with other functions, before using the CTMn function, make sure the corresponding pin-shared function registers be set properly.

Compact Type TM Block Diagram (n=0~2)

Compact Type TM Operation

At its core is a 10-bit count-up counter which is driven by a user selectable internal or external clock source. There are also two internal comparators with the names, Comparator A and Comparator P. These comparators will compare the value in the counter with CCRP and CCRA registers. The CCRP is 3-bit wide whose value is compared with the highest three bits in the counter while the CCRA is 10-bit wide and therefore compares with all counter bits.

The only way of changing the value of the 10-bit counter using the application program, is to clear the counter by changing the CTnON bit from low to high. The counter will also be cleared automatically by a counter overflow or a compare match with one of its associated comparators. When these conditions occur, a CTM interrupt signal will also usually be generated. The Compact Type TM can operate in a number of different operational modes, can be driven by different clock sources including an input pin and can also control two output pins. All operating setup conditions are selected using relevant internal registers.

Compact Type TM Register Description

Overall operation of the Compact Type TM is controlled using a series of registers. A read only register pair exists to store the internal counter 10-bit value, while a read/write register pair exists to store the internal 10-bit CCRA value. The remaining two registers are control registers which setup the different operating and control modes as well as the three CCRP bits.

Register Name	Bit							
	7	6	5	4	3	2	1	0
CTMnC0	CTnPAU	CTnCK2	CTnCK1	CTnCK0	CTnON	CTnRP2	CTnRP1	CTnRP0
CTMnC1	CTnM1	CTnM0	CTnIO1	CTnIO0	CTnOC	CTnPOL	CTnDPX	CTnCCLR
CTMnDL	D7	D6	D5	D4	D3	D2	D1	D0
CTMnDH	—	—	—	—	—	—	D9	D8
CTMnAL	D7	D6	D5	D4	D3	D2	D1	D0
CTMnAH	—	—	—	—	—	—	D9	D8

10-bit Compact TM Register List (n=0~2)

- **CTMnC0 Register**

Bit	7	6	5	4	3	2	1	0
Name	CTnPAU	CTnCK2	CTnCK1	CTnCK0	CTnON	CTnRP2	CTnRP1	CTnRP0
R/W	R/W	R/W	R/W	R/W	R/W	R/W	R/W	R/W
POR	0	0	0	0	0	0	0	0

Bit 7 **CTnPAU**: CTMn Counter Pause Control
0: Run
1: Pause

The counter can be paused by setting this bit high. Clearing the bit to zero restores normal counter operation. When in a Pause condition the CTM will remain powered up and continue to consume power. The counter will retain its residual value when this bit changes from low to high and resume counting from this value when the bit changes to a low value again.

Bit 6~4 **CTnCK2~CTnCK0**: Select CTMn Counter clock
000: $f_{SYS}/4$
001: f_{SYS}
010: $f_H/16$
011: $f_H/64$
100: f_{SUB}
101: f_{SUB}
110: CTCKn rising edge clock
111: CTCKn falling edge clock

These three bits are used to select the clock source for the CTMn. The external pin clock source can be chosen to be active on the rising or falling edge. The clock source f_{SYS} is the system clock, while f_H and f_{SUB} are other internal clocks, the details of which can be found in the oscillator section.

Bit 3 **CTnON**: CTMn Counter On/Off Control
0: Off
1: On

This bit controls the overall on/off function of the CTM. Setting the bit high enables the counter to run, clearing the bit disables the CTM. Clearing this bit to zero will stop the counter from counting and turn off the CTM which will reduce its power consumption. When the bit changes state from low to high the internal counter value will be reset to zero, however when the bit changes from high to low, the internal counter will retain its residual value until the bit returns high again.

If the CTM is in the Compare Match Output Mode or the PWM Output Mode then the CTM output pin will be reset to its initial condition, as specified by the CTnOC bit, when the CTnON bit changes from low to high.

Bit 2~0 **CTnRP2~CTnRP0**: CTMn CCRP 3-bit register, compared with the CTMn Counter bit 9~bit 7 Comparator P Match Period
000: 1024 CTMn clocks
001: 128 CTMn clocks
010: 256 CTMn clocks
011: 384 CTMn clocks
100: 512 CTMn clocks
101: 640 CTMn clocks
110: 768 CTMn clocks
111: 896 CTMn clocks

These three bits are used to setup the value on the internal CCRP 3-bit register, which are then compared with the internal counter's highest three bits. The result of this comparison can be selected to clear the internal counter if the CTnCCLR bit is set to zero. Setting the CTnCCLR bit to zero ensures that a compare match with the CCRP values will reset the internal counter. As the CCRP bits are only compared with the highest three counter bits, the compare values exist in 128 clock cycle multiples. Clearing all three bits to zero is in effect allowing the counter to overflow at its maximum value.

- **CTMnC1 Register**

Bit	7	6	5	4	3	2	1	0
Name	CTnM1	CTnM0	CTnIO1	CTnIO0	CTnOC	CTnPOL	CTnDPX	CTnCCLR
R/W	R/W	R/W	R/W	R/W	R/W	R/W	R/W	R/W
POR	0	0	0	0	0	0	0	0

Bit 7~6 **CTnM1~CTnM0**: Select CTMn Operating Mode
00: Compare Match Output Mode
01: Undefined
10: PWM Output Mode
11: Timer/Counter Mode

These bits setup the required operating mode for the CTM. To ensure reliable operation the CTM should be switched off before any changes are made to the CTnM1 and CTnM0 bits. In the Timer/Counter Mode, the CTM output pin state is undefined.

Bit 5~4 **CTnIO1~CTnIO0**: Select CTPn output function

Compare Match Output Mode
00: No change
01: Output low
10: Output high
11: Toggle output

PWM Output Mode
00: PWM Output inactive state
01: PWM Output active state
10: PWM Output
11: Undefined

Timer/Counter Mode
Unused

These two bits are used to determine how the CTM output pin changes state when a certain condition is reached. The function that these bits select depends upon in which mode the CTM is running.

In the Compare Match Output Mode, the CTnIO1 and CTnIO0 bits determine how the CTM output pin changes state when a compare match occurs from the Comparator A. The CTM output pin can be setup to switch high, switch low or to toggle its present state when a compare match occurs from the Comparator A. When the bits are both zero, then no change will take place on the output. The initial value of the CTM output pin should be setup using the CTnOC bit in the CTMnC1 register. Note that the output level requested by the CTnIO1 and CTnIO0 bits must be different from the initial value setup using the CTnOC bit otherwise no change will occur on the CTM output pin when a compare match occurs. After the CTM output pin changes state it can be reset to its initial level by changing the level of the CTnON bit from low to high.

In the PWM Output Mode, the CTnIO1 and CTnIO0 bits determine how the CTM output pin changes state when a certain compare match condition occurs. The PWM output function is modified by changing these two bits. It is necessary to only change the values of the CTnIO1 and CTnIO0 bits only after the CTM has been switched off. Unpredictable PWM outputs will occur if the CTnIO1 and CTnIO0 bits are changed when The CTM is running.

Bit 3 **CTnOC**: CTPn Output control bit

Compare Match Output Mode
0: Initial low
1: Initial high

PWM Output Mode
0: Active low
1: Active high

This is the output control bit for the CTM output pin. Its operation depends upon whether CTM is being used in the Compare Match Output Mode or in the PWM Output Mode. It has no effect if the CTM is in the Timer/Counter Mode. In the Compare Match Output Mode it determines the logic level of the CTM output pin before a compare match occurs. In the PWM Output Mode it determines if the PWM signal is active high or active low.

Bit 2 **CTnPOL**: CTPn Output polarity Control
0: Non-invert
1: Invert

This bit controls the polarity of the CTPn output pin. When the bit is set high the CTM output pin will be inverted and not inverted when the bit is zero. It has no effect if the CTM is in the Timer/Counter Mode.

Bit 1 **CTnDPX**: CTMn PWM period/duty Control
0: CCRP – period, CCRA – duty
1: CCRP – duty; CCRA – period

This bit determines which of the CCRA and CCRP registers are used for period and duty control of the PWM waveform.

Bit 0 **CTnCCLR**: Select CTMn Counter clear condition
0: CTMn Comparatror P match
1: CTMn Comparatror A match

This bit is used to select the method which clears the counter. Remember that the Compact TM contains two comparators, Comparator A and Comparator P, either of which can be selected to clear the internal counter. With the CTnCCLR bit set high, the counter will be cleared when a compare match occurs from the Comparator A. When the bit is low, the counter will be cleared when a compare match occurs from the Comparator P or with a counter overflow. A counter overflow clearing method can only be implemented if the CCRP bits are all cleared to zero. The CTnCCLR bit is not used in the PWM Output Mode.

- **CTMnDL Register**

Bit	7	6	5	4	3	2	1	0
Name	D7	D6	D5	D4	D3	D2	D1	D0
R/W	R	R	R	R	R	R	R	R
POR	0	0	0	0	0	0	0	0

Bit 7~0 **D7~D0**: CTMn Counter Low Byte Register bit 7 ~ bit 0
CTMn 10-bit Counter bit 7 ~ bit 0

- **CTMnDH Register**

Bit	7	6	5	4	3	2	1	0
Name	—	—	—	—	—	—	D9	D8
R/W	—	—	—	—	—	—	R	R
POR	—	—	—	—	—	—	0	0

Bit 7~2 Unimplemented, read as "0"

Bit 1~0 **D9~D8**: CTMn Counter High Byte Register bit 1 ~ bit 0
CTMn 10-bit Counter bit 9 ~ bit 8

- **CTMnAL Register**

Bit	7	6	5	4	3	2	1	0
Name	D7	D6	D5	D4	D3	D2	D1	D0
R/W	R/W	R/W	R/W	R/W	R/W	R/W	R/W	R/W
POR	0	0	0	0	0	0	0	0

Bit 7~0 **D7~D0**: CTMn CCRA Low Byte Register bit 7 ~ bit 0
CTMn 10-bit CCRA bit 7 ~ bit 0

- **CTMnAH Register**

Bit	7	6	5	4	3	2	1	0
Name	—	—	—	—	—	—	D9	D8
R/W	—	—	—	—	—	—	R/W	R/W
POR	—	—	—	—	—	—	0	0

Bit 7~2 Unimplemented, read as "0"

Bit 1~0 **D9~D8**: CTMn CCRA High Byte Register bit 1 ~ bit 0
CTMn 10-bit CCRA bit 9 ~ bit 8

Compact Type TM Operating Modes

The Compact Type TM can operate in one of three operating modes, Compare Match Output Mode, PWM Output Mode or Timer/Counter Mode. The operating mode is selected using the CTnM1 and CTnM0 bits in the CTMnC1 register.

Compare Match Output Mode

To select this mode, bits CTnM1 and CTnM0 in the CTMnC1 register, should be set to 00 respectively. In this mode once the counter is enabled and running it can be cleared by three methods. These are a counter overflow, a compare match from Comparator A and a compare match from Comparator P. When the CTnCCLR bit is low, there are two ways in which the counter can be cleared. One is when a compare match occurs from Comparator P, the other is when the CCRP bits are all zero which allows the counter to overflow. Here both CTMnAF and CTMnPF interrupt request flags for the Comparator A and Comparator P respectively, will both be generated.

If the CTnCCLR bit in the CTMnC1 register is high then the counter will be cleared when a compare match occurs from Comparator A. However, here only the CTMnAF interrupt request flag will be generated even if the value of the CCRP bits is less than that of the CCRA registers. Therefore when CTnCCLR is high no CTMnPF interrupt request flag will be generated. If the CCRA bits are all zero, the counter will overflow when it reaches its maximum 10-bit, 3FF Hex, value, however here the CTMnAF interrupt request flag will not be generated.

As the name of the mode suggests, after a comparison is made, the CTM output pin will change state. The CTM output pin condition however only changes state when a CTMnAF interrupt request flag is generated after a compare match occurs from Comparator A. The CTMnPF interrupt request flag, generated from a compare match occurs from Comparator P, will have no effect on the CTM output pin. The way in which the CTM output pin changes state are determined by the condition of the CTnIO1 and CTnIO0 bits in the CTMnC1 register. The CTM output pin can be selected using the CTnIO1 and CTnIO0 bits to go high, to go low or to toggle from its present condition when a compare match occurs from Comparator A. The initial condition of the CTM output pin, which is setup after the CTnON bit changes from low to high, is setup using the CTnOC bit. Note that if the CTnIO1 and CTnIO0 bits are zero then no pin change will take place.

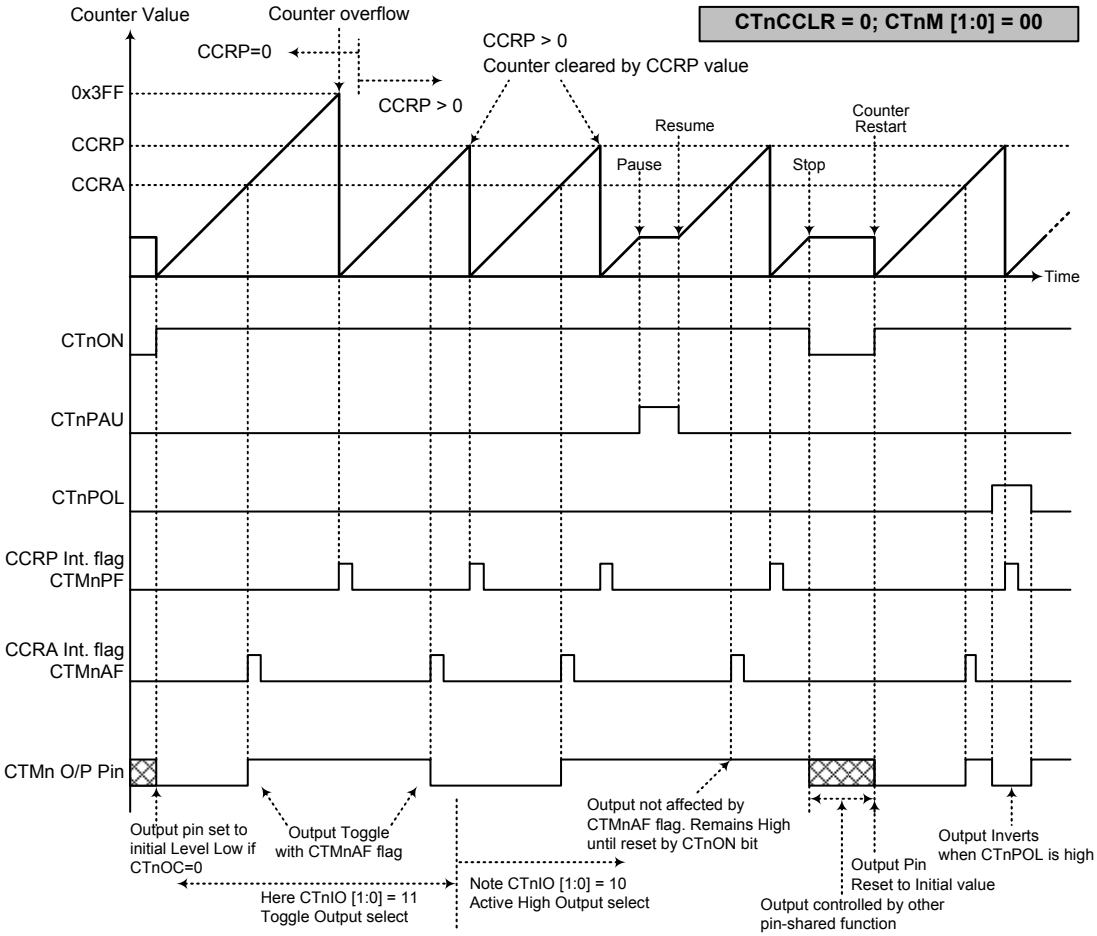

Compare Match Output Mode – CTnCCLR=0 (n=0~2)

Note: 1. With CTnCCLR = 0, a Comparator P match will clear the counter
2. The CTM output pin is controlled only by the CTMnAF flag
3. The output pin reset to initial state by a CTnON bit rising edge

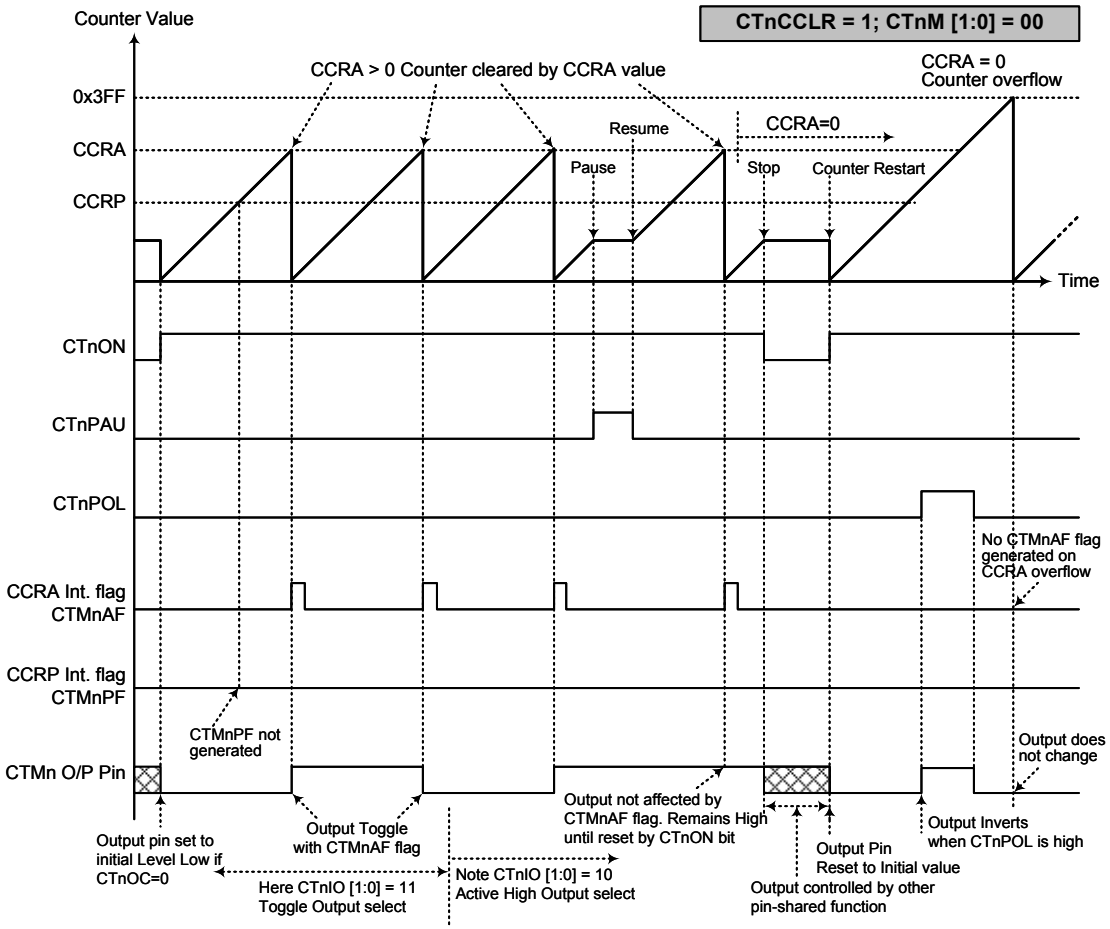

Compare Match Output Mode – CTnCCLR=1 (n=0~2)

Note: 1. With CTnCCLR = 1, a Comparator A match will clear the counter
2. The CTMn output pin is controlled only by the CTMnAF flag
3. The output pin reset to initial state by a CTnON bit rising edge
4. The CTMnPF flags is not generated when CTnCCLR = 1

Timer/Counter Mode

To select this mode, bits CTnM1 and CTnM0 in the CTMnC1 register should be set to 11 respectively. The Timer/Counter Mode operates in an identical way to the Compare Match Output Mode generating the same interrupt flags. The exception is that in the Timer/Counter Mode the CTMn output pin is not used. Therefore the above description and Timing Diagrams for the Compare Match Output Mode can be used to understand its function.

PWM Output Mode

To select this mode, bits CTnM1 and CTnM0 in the CTMnC1 register should be set to 10 respectively. The PWM function within the CTMn is useful for applications which require functions such as motor control, heating control, illumination control etc. By providing a signal of fixed frequency but of varying duty cycle on the CTM output pin, a square wave AC waveform can be generated with varying equivalent DC RMS values.

As both the period and duty cycle of the PWM waveform can be controlled, the choice of generated waveform is extremely flexible. In the PWM Output Mode, the CTnCCLR bit has no effect on the PWM operation. Both of the CCRA and CCRP registers are used to generate the PWM waveform, one register is used to clear the internal counter and thus control the PWM waveform frequency, while the other one is used to control the duty cycle. Which register is used to control either frequency or duty cycle is determined using the CTnDPX bit in the CTMnC1 register. The PWM waveform frequency and duty cycle can therefore be controlled by the values in the CCRA and CCRP registers.

An interrupt flag, one for each of the CCRA and CCRP, will be generated when a compare match occurs from either Comparator A or Comparator P. The CTnOC bit in the CTMnC1 register is used to select the required polarity of the PWM waveform while the two CTnIO1 and CTnIO0 bits are used to enable the PWM output or to force the CTM output pin to a fixed high or low level. The CTnPOL bit is used to reverse the polarity of the PWM output waveform.

- **10-bit CTM, PWM Output Mode, Edge-aligned Mode, CTnDPX=0**

CCRP	001b	010b	011b	100b	101b	110b	111b	000b
Period	128	256	384	512	640	768	896	1024
Duty	CCRA							

If f_{SYS} = 8MHz, CTM clock source is $f_{SYS}/4$, CCRP = 100b, CCRA =128,

The CTM PWM output frequency = $(f_{SYS}/4) / 512 = f_{SYS}/2048$ = 4kHz, duty = 128/512 = 25%.

If the Duty value defined by the CCRA register is equal to or greater than the Period value, then the PWM output duty is 100%.

- **10-bit CTM, PWM Output Mode, Edge-aligned Mode, CTnDPX=1**

CCRP	001b	010b	011b	100b	101b	110b	111b	000b
Period	CCRA							
Duty	128	256	384	512	640	768	896	1024

The PWM output period is determined by the CCRA register value together with the CTM clock while the PWM duty cycle is defined by the CCRP register value.

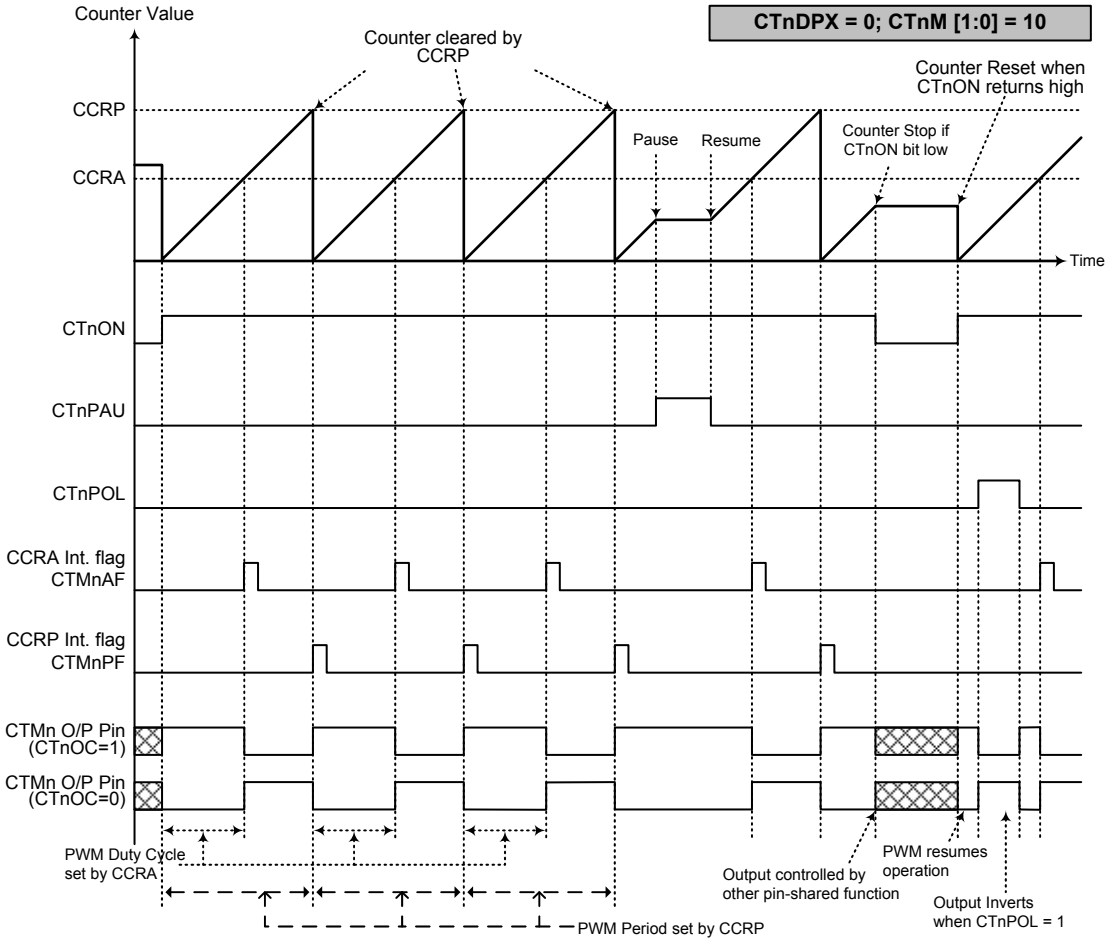

PWM Output Mode – CTnDPX=0 (n=0~2)

Note: 1. Here CTnDPX = 0 – Counter cleared by CCRP
2. A counter clear sets the PWM Period
3. The internal PWM function continues running even when CTnIO[1:0] = 00 or 01
4. The CTnCCLR bit has no influence on PWM operation

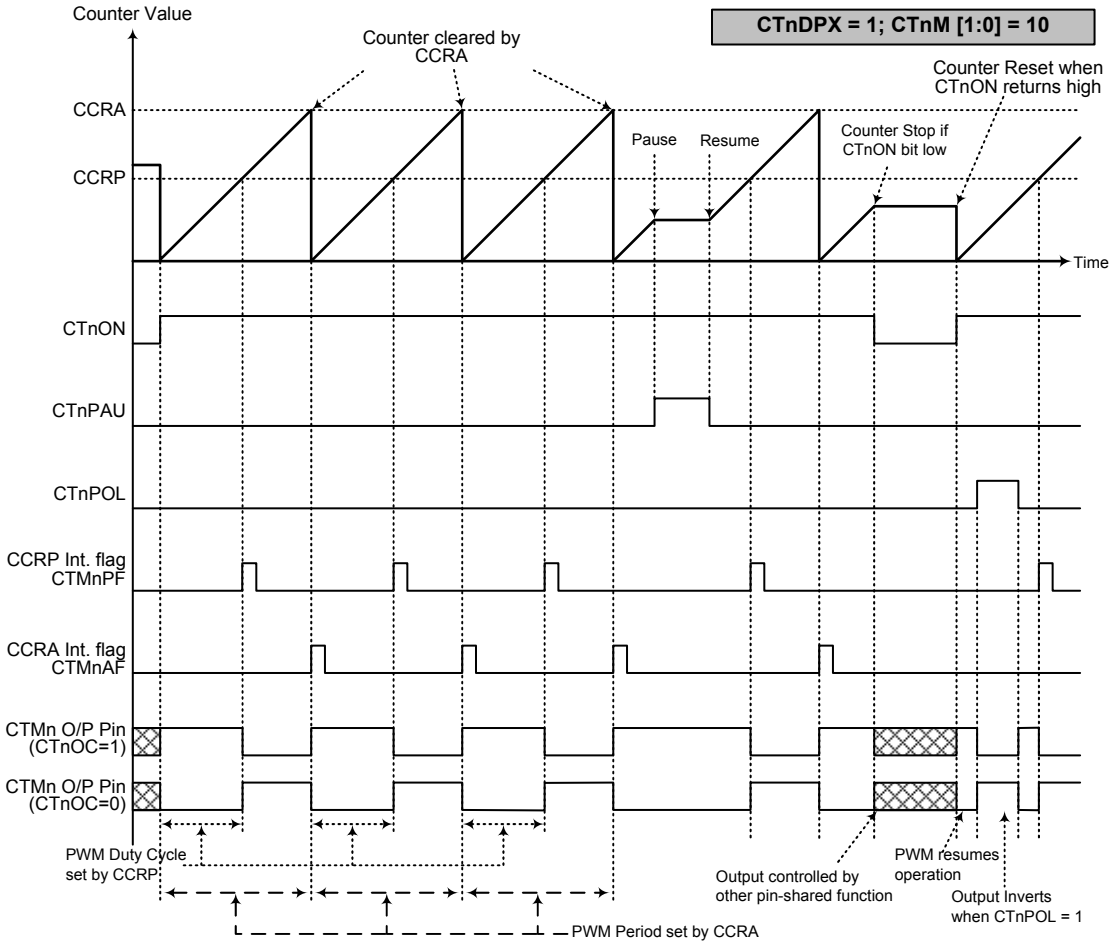

PWM Output Mode – CTnDPX=1(n=0~2)

Note: 1. Here CTnDPX = 1 – Counter cleared by CCRA
2. A counter clear sets the PWM Period
3. The internal PWM function continues even when CTnIO[1:0] = 00 or 01
4. The CTnCCLR bit has no influence on PWM operation

Standard Type TM – STM

The Standard Type TM contains five operating modes, which are Compare Match Output, Timer/ Event Counter, Capture Input, Single Pulse Output and PWM Output modes. The Standard TM can be controlled with one external input pin and can drive one external output pin.

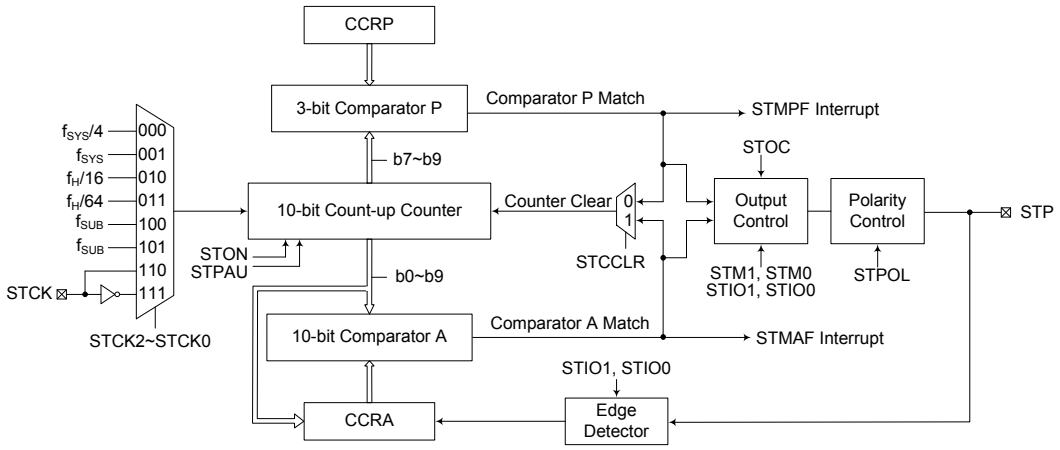

Note: As the STM external pins are pin-shared with other functions, before using the STM function, make sure the corresponding pin-shared function registers be set properly.

Standard Type TM Block Diagram

Standard TM Operation

At its core is a 10-bit count-up counter which is driven by a user selectable internal clock source. There are also two internal comparators with the names, Comparator A and Comparator P. These comparators will compare the value in the counter with CCRP and CCRA registers. The CCRP is 3-bit wide whose value is compared with the highest 3 bits in the counter while the CCRA is the 10 bits and therefore compares with all counter bits.

The only way of changing the value of the 10-bit counter using the application program, is to clear the counter by changing the STON bit from low to high. The counter will also be cleared automatically by a counter overflow or a compare match with one of its associated comparators. When these conditions occur, a STM interrupt signal will also usually be generated. The Standard Type TM can operate in a number of different operational modes, can be driven by different clock sources and can also control an output pin. All operating setup conditions are selected using relevant internal registers.

Standard Type TM Register Description

Overall operation of the Standard TM is controlled using series of registers. A read only register pair exists to store the internal counter 10-bit value, while a read/write register pair exists to store the internal 10-bit CCRA value. The remaining two registers are control registers which setup the different operating and control modes as well as three CCRP bits.

Register Name	Bit							
	7	6	5	4	3	2	1	0
STMC0	STPAU	STCK2	STCK1	STCK0	STON	STRP2	STRP1	STRP0
STMC1	STM1	STM0	STIO1	STIO0	STOC	STPOL	STDPX	STCCLR
STMDL	D7	D6	D5	D4	D3	D2	D1	D0
STMDH	—	—	—	—	—	—	D9	D8
STMAL	D7	D6	D5	D4	D3	D2	D1	D0
STMAH	—	—	—	—	—	—	D9	D8

10-bit Standard TM Register List

- **STMC0 Register**

Bit	7	6	5	4	3	2	1	0
Name	STPAU	STCK2	STCK1	STCK0	STON	STRP2	STRP1	STRP0
R/W	R/W	R/W	R/W	R/W	R/W	R/W	R/W	R/W
POR	0	0	0	0	0	0	0	0

Bit 7 **STPAU**: STM Counter Pause Control
0: Run
1: Pause

The counter can be paused by setting this bit high. Clearing the bit to zero restores normal counter operation. When in a Pause condition the STM will remain powered up and continue to consume power. The counter will retain its residual value when this bit changes from low to high and resume counting from this value when the bit changes to a low value again.

Bit 6~4 **STCK2~STCK0**: Select STM Counter clock
000: $f_{SYS}/4$
001: f_{SYS}
010: $f_H/16$
011: $f_H/64$
100: f_{SUB}
101: f_{SUB}
110: STCK rising edge clock
111: STCK falling edge clock

These three bits are used to select the clock source for the STM. The external pin clock source can be chosen to be active on the rising or falling edge. The clock source f_{SYS} is the system clock, while f_H and f_{SUB} are other internal clocks, the details of which can be found in the oscillator section.

Bit 3 **STON**: STM Counter On/Off Control
0: Off
1: On

This bit controls the overall on/off function of the STM. Setting the bit high enables the counter to run, clearing the bit disables the STM. Clearing this bit to zero will stop the counter from counting and turn off the STM which will reduce its power consumption. When the bit changes state from low to high the internal counter value will be reset to zero, however when the bit changes from high to low, the internal counter will retain its residual value until the bit returns high again. If the STM is in the Compare Match Output Mode or the PWM output Mode or Single Pulse Output Mode then the STM output pin will be reset to its initial condition, as specified by the STOC bit, when the STON bit changes from low to high.

Bit 2~0 **STRP2~ STRP0**: STM CCRP 3-bit register, compared with the STM Counter bit 9~bit 7 Comparator P Match Period
000: 1024 STM clocks
001: 128 STM clocks
010: 256 STM clocks
011: 384 STM clocks
100: 512 STM clocks
101: 640 STM clocks
110: 768 STM clocks
111: 896 STM clocks

These three bits are used to setup the value on the internal CCRP 3-bit register, which are then compared with the internal counter's highest three bits. The result of this comparison can be selected to clear the internal counter if the STCCLR bit is set to zero. Setting the STCCLR bit to zero ensures that a compare match with the CCRP values will reset the internal counter. As the CCRP bits are only compared with the highest three counter bits, the compare values exist in 128 clock cycle multiples. Clearing all three bits to zero is in effect allowing the counter to overflow at its maximum value.

- **STMC1 Register**

Bit	7	6	5	4	3	2	1	0
Name	STM1	STM0	STIO1	STIO0	STOC	STPOL	STDPX	STCCLR
R/W	R/W	R/W	R/W	R/W	R/W	R/W	R/W	R/W
POR	0	0	0	0	0	0	0	0

Bit 7~6 **STM1~ STM0**: Select STM Operating Mode
00: Compare Match Output Mode
01: Capture Input Mode
10: PWM Output Mode or Single Pulse Output Mode
11: Timer/Counter Mode

These bits setup the required operating mode for the STM. To ensure reliable operation the STM should be switched off before any changes are made to the STM1 and STM0 bits. In the Timer/Counter Mode, the STM output pin state is undefined.

Bit 5~4 **STIO1~ STIO0**: Select STM function

Compare Match Output Mode
00: No change
01: Output low
10: Output high
11: Toggle output

PWM output Mode/ Single Pulse Output Mode
00: PWM Output inactive state
01: PWM Output active state
10: PWM output
11: Single pulse output

Capture Input Mode
00: Input capture at rising edge of STP
01: Input capture at falling edge of STP
10: Input capture at falling/rising edge of STP
11: Input capture disabled

Timer/counter Mode
Unused

These two bits are used to determine how the STM output pin changes state when a certain condition is reached. The function that these bits select depends upon in which mode the STM is running.

In the Compare Match Output Mode, the STIO1~STIO0 bits determine how the STM output pin changes state when a compare match occurs from the Comparator A. The STM output pin can be setup to switch high, switch low or to toggle its present state when a compare match occurs from the Comparator A. When the STIO1~STIO0 bits are both zero, then no change will take place on the output. The initial value of the STM output pin should be setup using the STOC bit. Note that the output level requested by the STIO1~STIO0 bits must be different from the initial value setup using the STOC bit otherwise no change will occur on the STM output pin when a compare match occurs. After the STM output pin changes state, it can be reset to its initial level by changing the level of the STON bit from low to high.

In the PWM Output Mode, the STIO1 and STIO0 bits determine how the STM output pin changes state when a certain compare match condition occurs. The PWM output function is modified by changing these two bits. It is necessary to change the values of the STIO1 and STIO0 bits only after the STM has been switched off. Unpredictable PWM outputs will occur if the STIO1 and STIO0 bits are changed when the STM is running.

Bit 3 **STOC**: STM Output control bit

Compare Match Output Mode
0: Initial low
1: Initial high

PWM output Mode/ Single Pulse Output Mode
0: Active low
1: Active high

This is the output control bit for the STM output pin. Its operation depends upon whether STM is being used in the Compare Match Output Mode or in the PWM output Mode/ Single Pulse Output Mode. It has no effect if the STM is in the Timer/ Counter Mode. In the Compare Match Output Mode it determines the logic level of the STM output pin before a compare match occurs. In the PWM output Mode it determines if the PWM signal is active high or active low. In the Single Pulse Output Mode it determines the logic level of the STM output pin when the STON bit changes from low to high.

Bit 2 **STPOL**: STM Output polarity Control
0: Non-invert
1: Invert

This bit controls the polarity of the STM output pin. When the bit is set high the STM output pin will be inverted and not inverted when the bit is zero. It has no effect if the STM is in the Timer/Counter Mode.

Bit 1 **STDPX**: STM PWM period/duty Control
0: CCRP – period; CCRA – duty
1: CCRP – duty; CCRA – period

This bit, determines which of the CCRA and CCRP registers are used for period and duty control of the PWM waveform.

Bit 0 **STCCLR**: Select STM Counter clear condition
0: STM Comparator P match
1: STM Comparator A match

This bit is used to select the method which clears the counter. Remember that the Standard TM contains two comparators, Comparator A and Comparator P, either of which can be selected to clear the internal counter. With the STCCLR bit set high, the counter will be cleared when a compare match occurs from the Comparator A. When the bit is low, the counter will be cleared when a compare match occurs from the Comparator P or with a counter overflow. A counter overflow clearing method can only be implemented if the CCRP bits are all cleared to zero. The STCCLR bit is not used in the PWM output mode, Single Pulse or Input Capture Mode.

- **STMDL Register**

Bit	7	6	5	4	3	2	1	0
Name	D7	D6	D5	D4	D3	D2	D1	D0
R/W	R	R	R	R	R	R	R	R
POR	0	0	0	0	0	0	0	0

Bit 7~0 STM Counter Low Byte Register bit 7 ~ bit 0
STM 10-bit Counter bit 7 ~ bit 0

- **STMDH Register**

Bit	7	6	5	4	3	2	1	0
Name	—	—	—	—	—	—	D9	D8
R/W	—	—	—	—	—	—	R	R
POR	—	—	—	—	—	—	0	0

Bit 7~2 Unimplemented, read as "0"

Bit 1~0 STM Counter High Byte Register bit 1 ~ bit 0
STM 10-bit Counter bit 9 ~ bit 8

- **STMAL Register**

Bit	7	6	5	4	3	2	1	0
Name	D7	D6	D5	D4	D3	D2	D1	D0
R/W	R/W	R/W	R/W	R/W	R/W	R/W	R/W	R/W
POR	0	0	0	0	0	0	0	0

Bit 7~0 STM CCRA Low Byte Register bit 7 ~ bit 0
STM 10-bit CCRA bit 7 ~ bit 0

- **STMAH Register**

Bit	7	6	5	4	3	2	1	0
Name	—	—	—	—	—	—	D9	D8
R/W	—	—	—	—	—	—	R/W	R/W
POR	—	—	—	—	—	—	0	0

Bit 7~2 Unimplemented, read as "0"

Bit 1~0 STM CCRA High Byte Register bit 1 ~ bit 0
STM 10-bit CCRA bit 9 ~ bit 8

Standard Type TM Operating Modes

The Standard Type TM can operate in one of five operating modes, Compare Match Output Mode, PWM Output Mode, Single Pulse Output Mode, Capture Input Mode or Timer/Counter Mode. The operating mode is selected using the STM1 and STM0 bits in the STMC1 register.

Compare Match Output Mode

To select this mode, bits STM1 and STM0 in the STMC1 register, should be set to 00 respectively. In this mode once the counter is enabled and running it can be cleared by three methods. These are a counter overflow, a compare match from Comparator A and a compare match from Comparator P. When the STCCLR bit is low, there are two ways in which the counter can be cleared. One is when a compare match from Comparator P, the other is when the CCRP bits are all zero which allows the counter to overflow. Here both STMAF and STMPF interrupt request flags for Comparator A and Comparator P respectively, will both be generated.

If the STCCLR bit in the STMC1 register is high then the counter will be cleared when a compare match occurs from Comparator A. However, here only the STMAF interrupt request flag will be generated even if the value of the CCRP bits is less than that of the CCRA registers. Therefore when STCCLR is high no STMPF interrupt request flag will be generated. In the Compare Match Output Mode, the CCRA cannot be set to "0". If the CCRA bits are all zero, the counter will overflow when it reaches its maximum 10-bit, 3FF Hex, value, however here the STMAF interrupt request flag will not be generated.

As the name of the mode suggests, after a comparison is made, the STM output pin, will change state. The STM output pin condition however only changes state when an STMAF interrupt request flag is generated after a compare match occurs from Comparator A. The STMPF interrupt request flag, generated from a compare match occurs from Comparator P, will have no effect on the STM output pin. The way in which the STM output pin changes state are determined by the condition of the STIO1 and STIO0 bits in the STMC1 register. The STM output pin can be selected using the STIO1 and STIO0 bits to go high, to go low or to toggle from its present condition when a compare match occurs from Comparator A. The initial condition of the STM output pin, which is setup after the STON bit changes from low to high, is setup using the STOC bit. Note that if the STIO1 and STIO0 bits are zero then no pin change will take place.

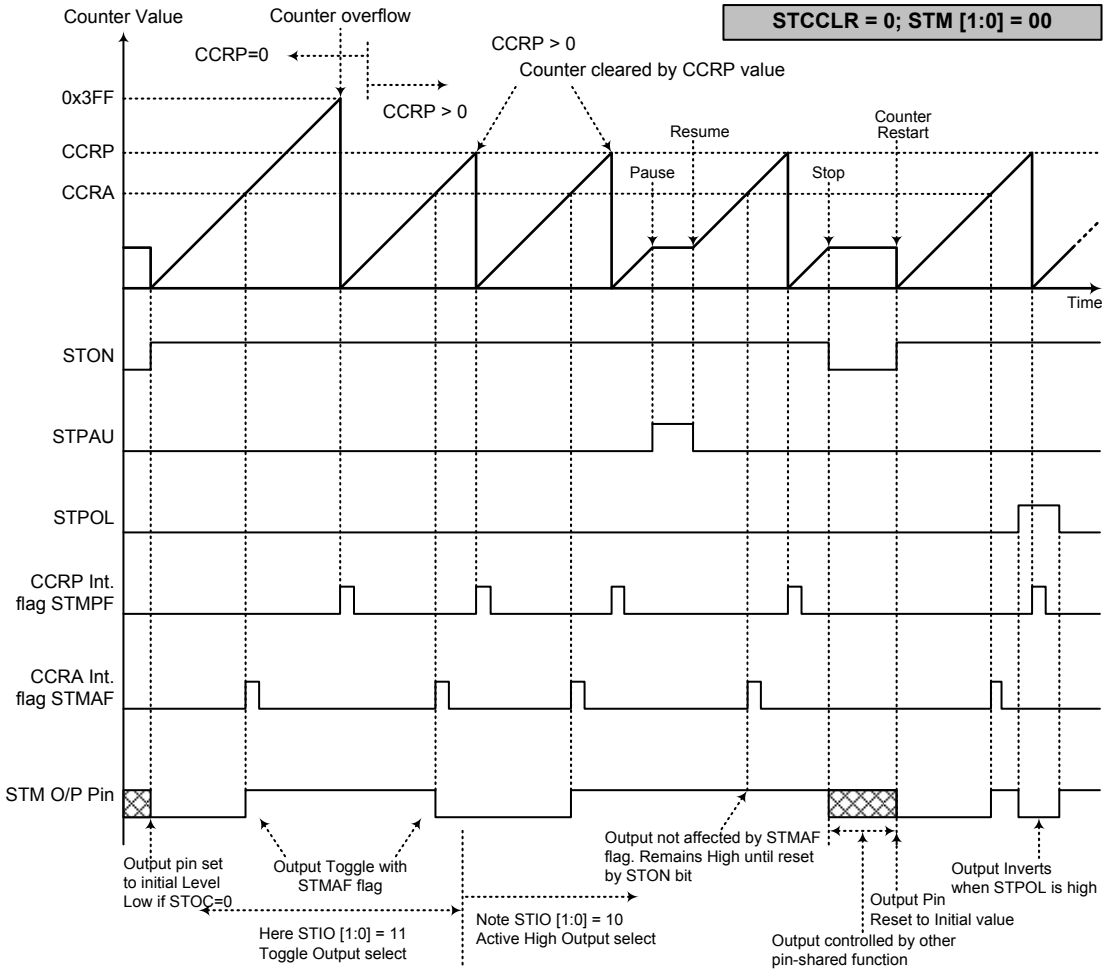

Compare Match Output Mode – STCCLR = 0

Note: 1. With STCCLR = 0 a Comparator P match will clear the counter
2. The STM output pin controlled only by the STMAF flag
3. The output pin reset to initial state by a STON bit rising edge

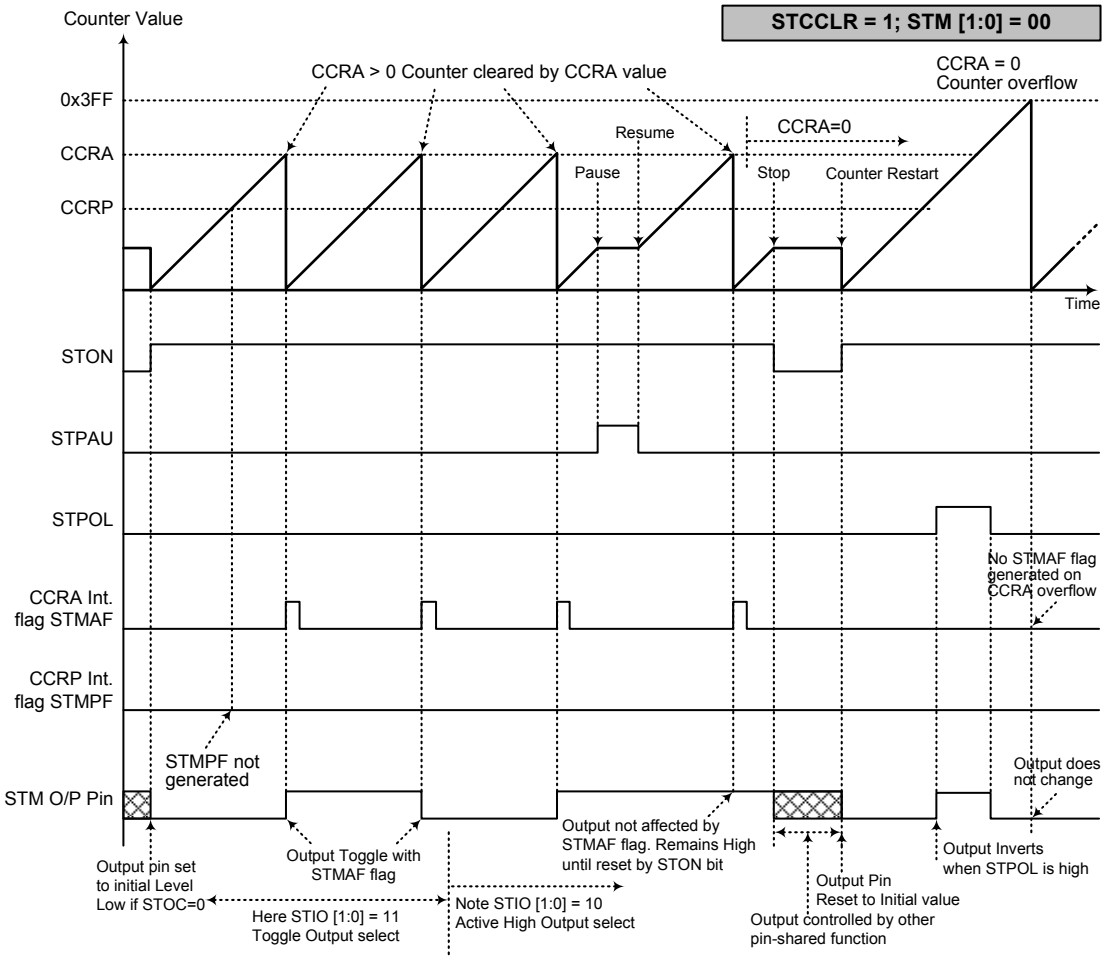

Compare Match Output Mode – STCCLR = 1

Note: 1. With STCCLR = 1 a Comparator A match will clear the counter
2. The STM output pin controlled only by the STMAF flag
3. The output pin reset to initial state by a STON rising edge
4. The STMPF flag is not generated when STCCLR = 1

Timer/Counter Mode

To select this mode, bits STM1 and STM0 in the STMC1 register should be set to 11 respectively. The Timer/Counter Mode operates in an identical way to the Compare Match Output Mode generating the same interrupt flags. The exception is that in the Timer/Counter Mode the STM output pin is not used. Therefore the above description and Timing Diagrams for the Compare Match Output Mode can be used to understand its function. As the STM output pin is not used in this mode, the pin can be used as a normal I/O pin or other pin-shared function by setting pin-share function register.

PWM Output Mode

To select this mode, bits STM1 and STM0 in the STMC1 register should be set to 10 respectively and also the STIO1 and STIO0 bits should be set to 10 respectively. The PWM function within the STM is useful for applications which require functions such as motor control, heating control, illumination control etc. By providing a signal of fixed frequency but of varying duty cycle on the STM output pin, a square wave AC waveform can be generated with varying equivalent DC RMS values.

As both the period and duty cycle of the PWM waveform can be controlled, the choice of generated waveform is extremely flexible. In the PWM output mode, the STCCLR bit has no effect as the PWM period. Both of the CCRA and CCRP registers are used to generate the PWM waveform, one register is used to clear the internal counter and thus control the PWM waveform frequency, while the other one is used to control the duty cycle. Which register is used to control either frequency or duty cycle is determined using the STDPX bit in the STMC1 register. The PWM waveform frequency and duty cycle can therefore be controlled by the values in the CCRA and CCRP registers.

An interrupt flag, one for each of the CCRA and CCRP, will be generated when a compare match occurs from either Comparator A or Comparator P. The STOC bit in the STMC1 register is used to select the required polarity of the PWM waveform while the two STIO1 and STIO0 bits are used to enable the PWM output or to force the STM output pin to a fixed high or low level. The STPOL bit is used to reverse the polarity of the PWM output waveform.

- **10-bit STM, PWM Output Mode, Edge-aligned Mode, STDPX=0**

CCRP	001b	010b	011b	100b	101b	110b	111b	000b
Period	128	256	384	512	640	768	896	1024
Duty	CCRA							

If f_{SYS} = 8MHz, TM clock source is $f_{SYS}/4$, CCRP = 100b and CCRA =128,

The STM PWM output frequency = $(f_{SYS}/4) / 512 = f_{SYS}/2048$ = 4kHz, duty = 128/512 = 25%.

If the Duty value defined by the CCRA register is equal to or greater than the Period value, then the PWM output duty is 100%.

- **10-bit STM, PWM Output Mode, Edge-aligned Mode, STDPX=1**

CCRP	001b	010b	011b	100b	101b	110b	111b	000b
Period	CCRA							
Duty	128	256	384	512	640	768	896	1024

The PWM output period is determined by the CCRA register value together with the STM clock while the PWM duty cycle is defined by the CCRP register value.

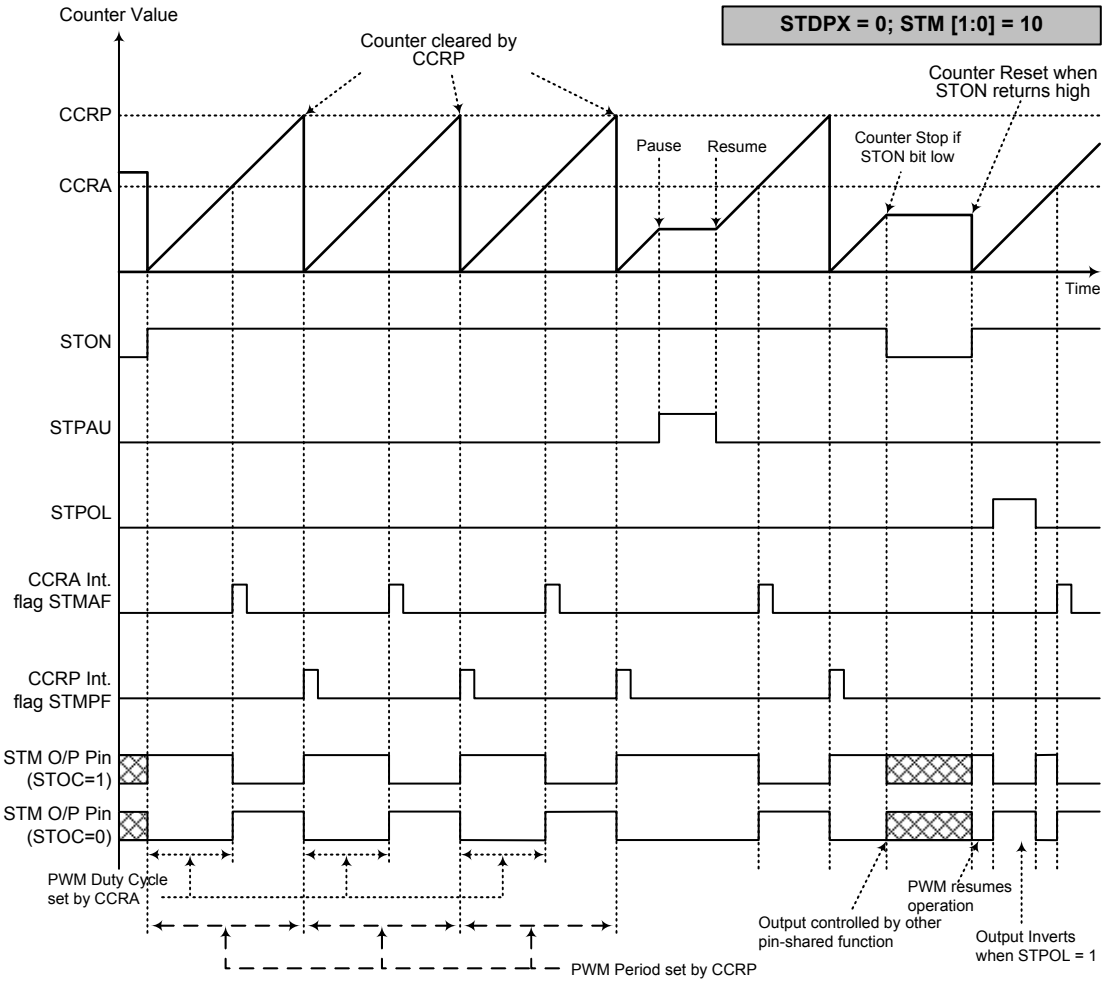

PWM Output Mode – STDPX = 0

Note: 1. Here STDPX = 0 – Counter cleared by CCRP
2. A counter clear sets PWM Period
3. The internal PWM function continues running even when STIO[1:0] = 00 or 01
4. The STCCLR bit has no influence on PWM operation

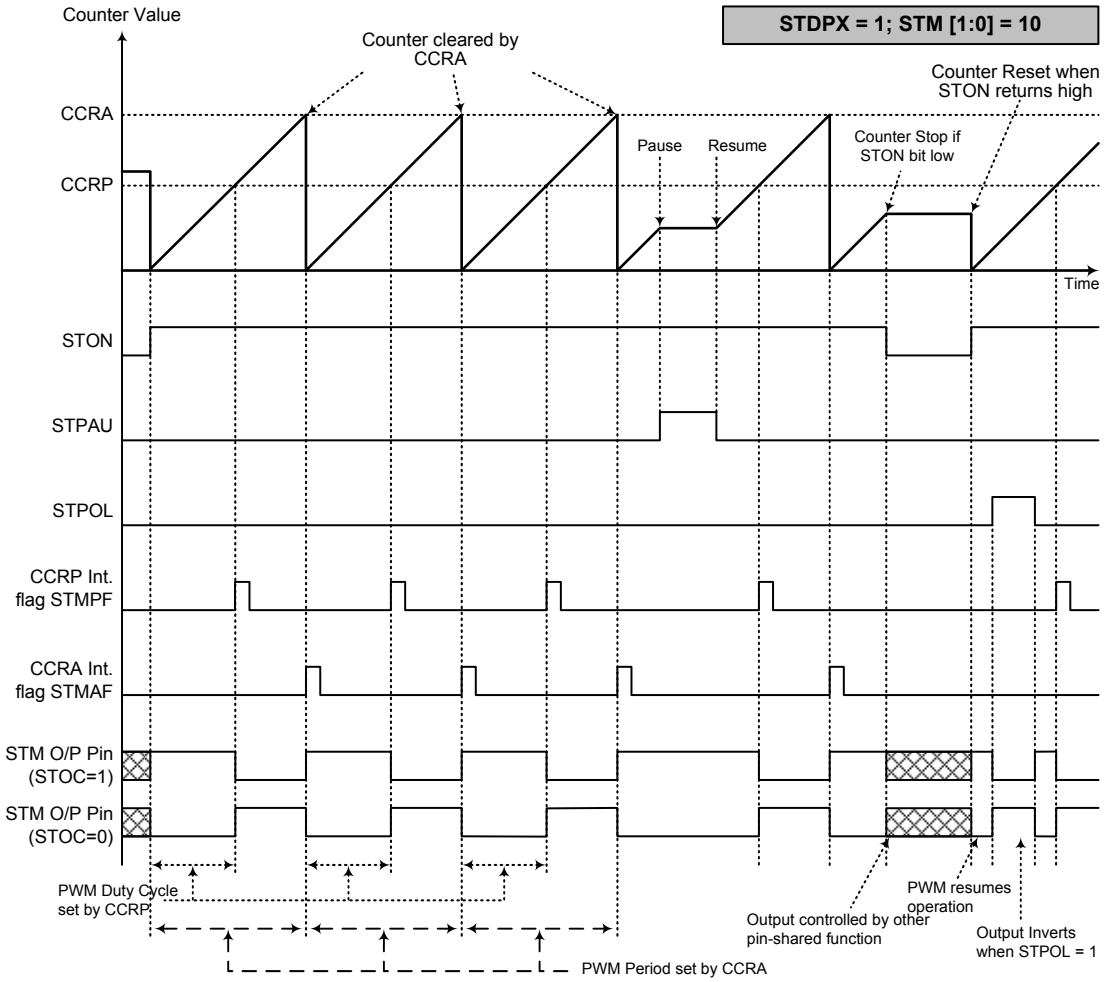

PWM Output Mode – STDPX = 1

Note: 1. Here STDPX = 1 – Counter cleared by CCRA
2. A counter clear sets PWM Period
3. The internal PWM function continues even when STIO[1:0] = 00 or 01
4. The STCCLR bit has no influence on PWM operation

Single Pulse Mode

To select this mode, bits STM1 and STM0 in the STMC1 register should be set to 10 respectively and also the STIO1 and STIO0 bits should be set to 11 respectively. The Single Pulse Output Mode, as the name suggests, will generate a single shot pulse on the STM output pin.

The trigger for the pulse output leading edge is a low to high transition of the STON bit, which can be implemented using the application program. However in the Single Pulse Mode, the STON bit can also be made to automatically change from low to high using the external STCK pin, which will in turn initiate the Single Pulse output. When the STON bit transitions to a high level, the counter will start running and the pulse leading edge will be generated. The STON bit should remain high when the pulse is in its active state. The generated pulse trailing edge will be generated when the STON bit is cleared to zero, which can be implemented using the application program or when a compare match occurs from Comparator A.

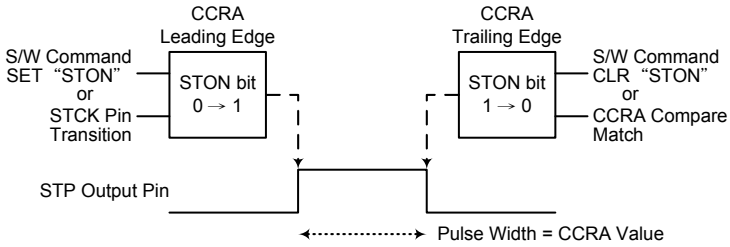

Single Pulse Generation

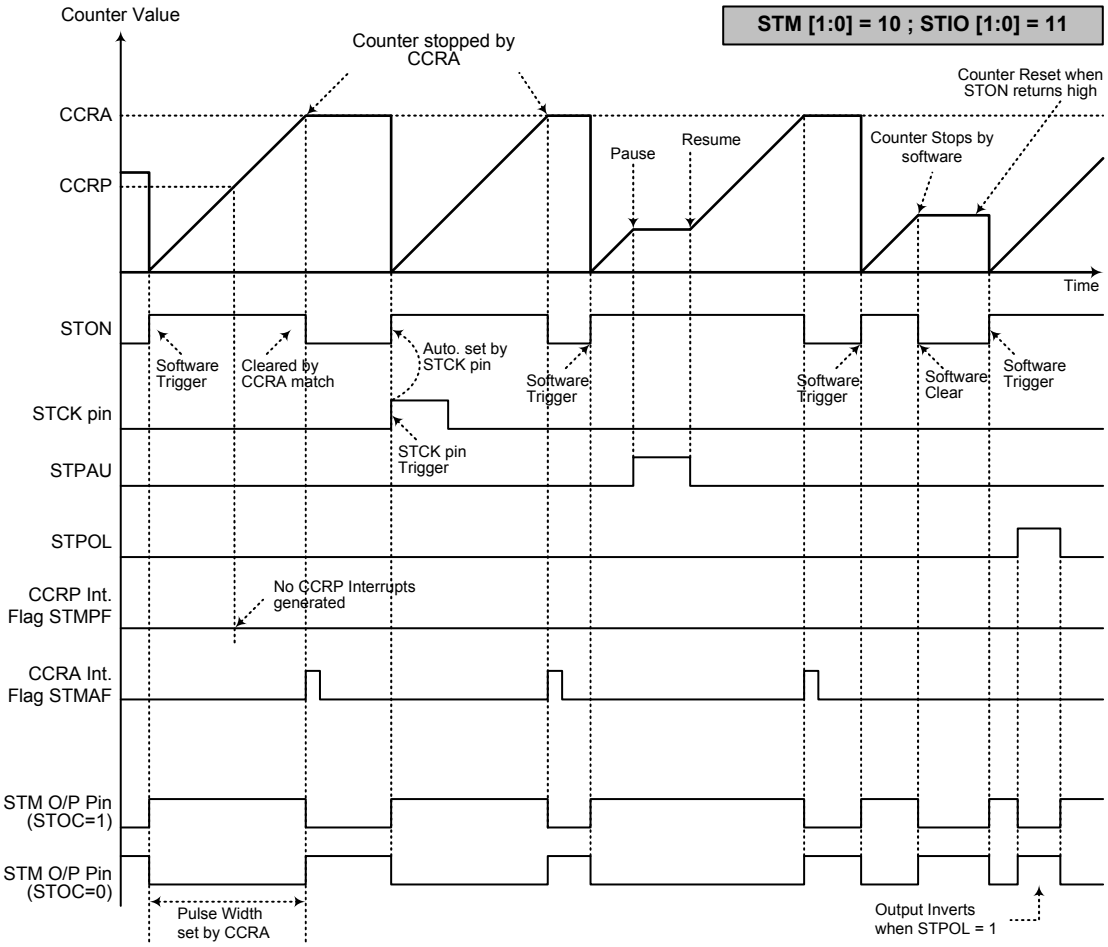

Single Pulse Mode

Note: 1. Counter stopped by CCRA match
2. CCRP is not used
3. The pulse is triggered by setting the STON bit high
4. In the Single Pulse Mode, STIO [1:0] must be set to "11" and cannot be changed.

However a compare match from Comparator A will also automatically clear the STON bit and thus generate the Single Pulse output trailing edge. In this way the CCRA value can be used to control the pulse width. A compare match from Comparator A will also generate a STM interrupt. The counter can only be reset back to zero when the STON bit changes from low to high when the counter restarts. In the Single Pulse Mode CCRP is not used. The STCCLR and STDPX bits are not used in this Mode.

Capture Input Mode

To select this mode bits STM1 and STM0 in the STMC1 register should be set to 01 respectively. This mode enables external signals to capture and store the present value of the internal counter and can therefore be used for applications such as pulse width measurement. The external signal is supplied on the STP, whose active edge can be either a rising edge, a falling edge or both rising and falling edges; the active edge transition type is selected using the STIO1 and STIO0 bits in the STMC1 register. The counter is started when the STON bit changes from low to high which is initiated using the application program.

When the required edge transition appears on the STP the present value in the counter will be latched into the CCRA registers and a STM interrupt generated. Irrespective of what events occur on the STP the counter will continue to free run until the STON bit changes from high to low. When a CCRP compare match occurs the counter will reset back to zero; in this way the CCRP value can be used to control the maximum counter value. When a CCRP compare match occurs from Comparator P, a STM interrupt will also be generated. Counting the number of overflow interrupt signals from the CCRP can be a useful method in measuring long pulse widths. The STIO1 and STIO0 bits can select the active trigger edge on the STP to be a rising edge, falling edge or both edge types. If the STIO1 and STIO0 bits are both set high, then no capture operation will take place irrespective of what happens on the STP, however it must be noted that the counter will continue to run. The STCCLR and STDPX bits are not used in this Mode.

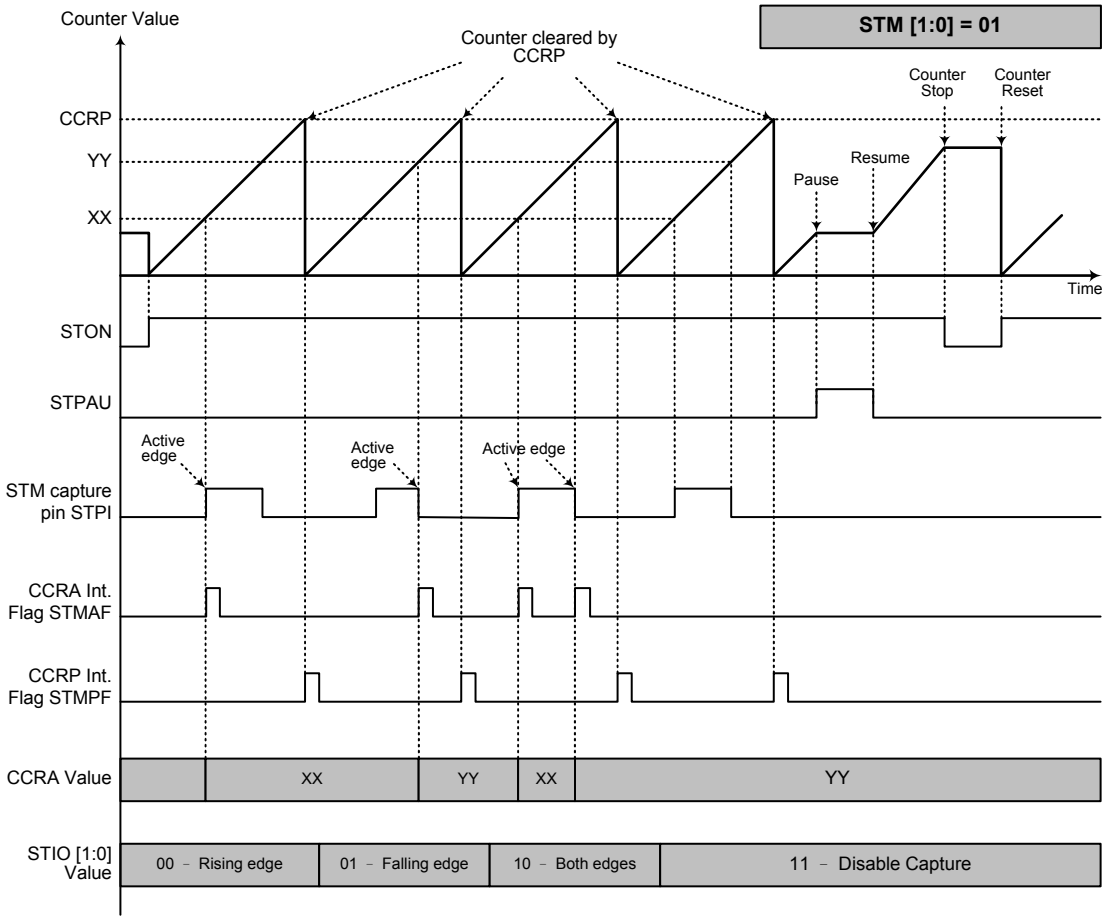

Capture Input Mode

Note: 1. STM[1:0] = 01 and active edge set by the STIO[1:0] bits
2. A TM Capture input pin active edge transfers the counter value to CCRA
3. The STCCLR and STDPX bits are not used
4. No output function – STOC and STPOL bits are not used
5. CCRP determines the counter value and the counter has a maximum count value when CCRP is equal to zero.

Periodic Type TM – PTM

The Periodic Type TM contains five operating modes, which are Compare Match Output, Timer/ Event Counter, Capture Input, Single Pulse Output and PWM Output modes.

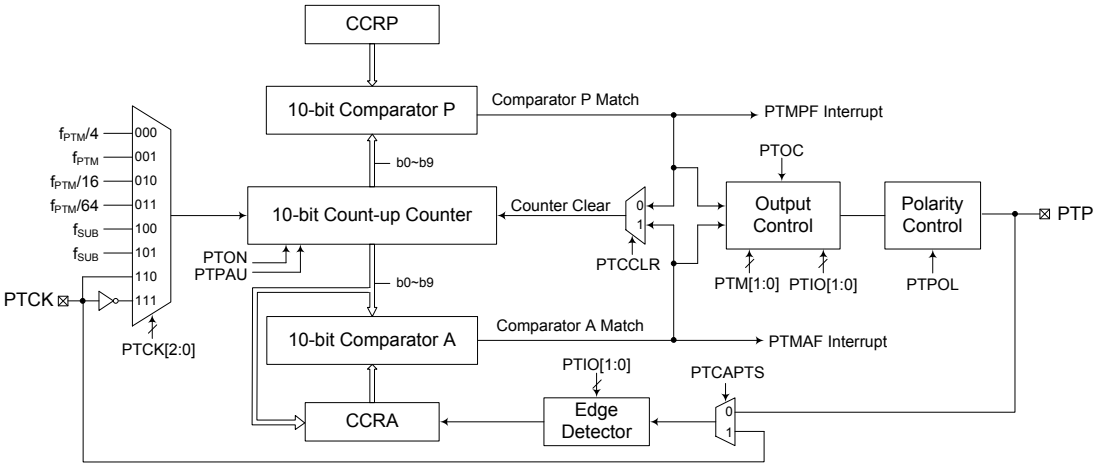

Notes: 1. As the PTM external pins are pin-shared with other functions, before using the PTM function, make sure the corresponding pin-shared function registers be set properly.
2. A dedicated oscillator which outputs the f_{PTM} frequency is provided for the PTM clock. Refer to the oscillator section for the oscillator fine-adjustment and enable control.

Periodic Type TM Block Diagram

Periodic TM Operation

The Periodic Type TM core is a 10-bit count-up counter which is driven by a user selectable internal or external clock source. There are also two internal comparators with the names, Comparator A and Comparator P. These comparators will compare the value in the counter with CCRP and CCRA registers. The CCRP comparator is 10-bit wide.

The only way of changing the value of the 10-bit counter using the application program, is to clear the counter by changing the PTON bit from low to high. The counter will also be cleared automatically by a counter overflow or a compare match with one of its associated comparators. When these conditions occur, a PTM interrupt signal will also usually be generated. The Periodic Type TM can operate in a number of different operational modes, can be driven by different clock sources and can also control more than one output pin. All operating setup conditions are selected using relevant internal registers.

Periodic Type TM Register Description

Overall operation of the Periodic Type TM is controlled using a series of registers. A read only register pair exists to store the internal counter 10-bit value, while two read/write register pairs exist to store the internal 10-bit CCRA value and CCRP value. The remaining two registers are control registers which setup the different operating and control modes.

Register Name	Bit							
	7	6	5	4	3	2	1	0
PTMC0	PTPAU	PTCK2	PTCK1	PTCK0	PTON	—	—	—
PTMC1	PTM1	PTM0	PTIO1	PTIO0	PTOC	PTPOL	PTCAPTS	PTCCLR
PTMDL	D7	D6	D5	D4	D3	D2	D1	D0
PTMDH	—	—	—	—	—	—	D9	D8
PTMAL	D7	D6	D5	D4	D3	D2	D1	D0
PTMAH	—	—	—	—	—	—	D9	D8
PTMRPL	D7	D6	D5	D4	D3	D2	D1	D0
PTMRPH	—	—	—	—	—	—	D9	D8

10-bit Periodic TM Register List

- **PTMC0 Register**

Bit	7	6	5	4	3	2	1	0
Name	PTPAU	PTCK2	PTCK1	PTCK0	PTON	—	—	—
R/W	R/W	R/W	R/W	R/W	R/W	—	—	—
POR	0	0	0	0	0	—	—	—

Bit 7 **PTPAU**: PTM Counter Pause Control
0: Run
1: Pause

The counter can be paused by setting this bit high. Clearing the bit to zero restores normal counter operation. When in a Pause condition the PTM will remain powered up and continue to consume power. The counter will retain its residual value when this bit changes from low to high and resume counting from this value when the bit changes to a low value again.

Bit 6~4 **PTCK2~PTCK0**: Select PTM Counter clock
000: $f_{PTM}/4$
001: f_{PTM}
010: $f_{PTM}/16$
011: $f_{PTM}/64$
100: f_{SUB}
101: f_{SUB}
110: PTCK rising edge clock
111: PTCK falling edge clock

These three bits are used to select the clock source for the PTM. The external pin clock source can be chosen to be active on the rising or falling edge. The clock source f_{PTM} is the PTM dedicated oscillator, PTMOSC, output frequency, while f_{SUB} is other internal clock, the details of which can be found in the oscillator section.

Bit 3 **PTON**: PTM Counter On/Off Control
0: Off
1: On

This bit controls the overall on/off function of the PTM. Setting the bit high enables the counter to run, clearing the bit disables the PTM. Clearing this bit to zero will stop the counter from counting and turn off the PTM which will reduce its power consumption. When the bit changes state from low to high the internal counter value will be reset to zero, however when the bit changes from high to low, the internal counter will retain its residual value until the bit returns high again.

If the PTM is in the Compare Match Output Mode, PWM Output Mode or Single Pulse Output Mode then the PTM output pin will be reset to its initial condition, as specified by the PTOC bit, when the PTON bit changes from low to high.

Bit 2~0 Unimplemented, read as "0"

- **PTMC1 Register**

Bit	7	6	5	4	3	2	1	0
Name	PTM1	PTM0	PTIO1	PTIO0	PTOC	PTPOL	PTCAPTS	PTCCLR
R/W	R/W	R/W	R/W	R/W	R/W	R/W	R/W	R/W
POR	0	0	0	0	0	0	0	0

Bit 7~6 **PTM1~PTM0**: Select PTM Operating Mode
00: Compare Match Output Mode
01: Capture Input Mode
10: PWM Output Mode or Single Pulse Output Mode
11: Timer/Counter Mode

These bits setup the required operating mode for the PTM. To ensure reliable operation the PTM should be switched off before any changes are made to the PTM1 and PTM0 bits. In the Timer/Counter Mode, the PTM output pin function can be disabled.

Bit 5~4 **PTIO1~PTIO0**: Select PTM external pin function

Compare Match Output Mode
00: No change
01: Output low
10: Output high
11: Toggle output

PWM Output Mode /Single Pulse Output Mode
00: PWM Output inactive state
01: PWM Output active state
10: PWM output
11: Single pulse output

Capture Input Mode
00: Input capture at rising edge of PTP or PTCK
01: Input capture at falling edge of PTP or PTCK
10: Input capture at falling/rising edge of PTP or PTCK
11: Input capture disabled

Timer/Counter Mode
Unused

These two bits are used to determine how the PTM output pin changes state when a certain condition is reached. The function that these bits select depends upon in which mode the PTM is running.

In the Compare Match Output Mode, the PTIO1 and PTIO0 bits determine how the PTM output pin changes state when a compare match occurs from the Comparator A. The PTM output pin can be setup to switch high, switch low or to toggle its present state when a compare match occurs from the Comparator A. When the bits are both zero, then no change will take place on the output. The initial value of the PTM output pin should be setup using the PTOC bit in the PTMC1 register. Note that the output level requested by the PTIO1 and PTIO0 bits must be different from the initial value setup using the PTOC bit otherwise no change will occur on the PTM output pin when a compare match occurs. After the PTM output pin changes state, it can be reset to its initial level by changing the level of the PTON bit from low to high.

In the PWM Output Mode, the PTIO1 and PTIO0 bits determine how the PTM output pin changes state when a certain compare match condition occurs. The PWM output function is modified by changing these two bits. It is necessary to only change the values of the PTIO1 and PTIO0 bits only after the TM has been switched off. Unpredictable PWM outputs will occur if the PTIO1 and PTIO0 bits are changed when the PTM is running.

Bit 3 **PTOC**: PTM PTP Output control bit

Compare Match Output Mode
0: Initial low
1: Initial high

PWM Output Mode /Single Pulse Output Mode
0: Active low
1: Active high

This is the output control bit for the PTP output pin. Its operation depends upon whether PTM is being used in the Compare Match Output Mode or in the PWM Output Mode /Single Pulse Output Mode.

It has no effect if the PTM is in the Timer/Counter Mode. In the Compare Match Output Mode it determines the logic level of the PTM output pin before a compare match occurs. In the PWM Output Mode it determines if the PWM signal is active high or active low. In the Single Pulse Output Mode it determines the logic level of the PTM output pin when the PTON bit changes from low to high.

Bit 2 **PTPOL**: PTP Output polarity Control
0: Non-invert
1: Invert

This bit controls the polarity of the PTP output pin. When the bit is set high the PTM output pin will be inverted and not inverted when the bit is zero. It has no effect if the PTM is in the Timer/Counter Mode.

Bit 1 **PTCAPTS**: PTM Capture Trigger Source Selection
0: From PTP pin
1: From PTCK pin

Bit 0 **PTCCLR**: Select PTM Counter clear condition
0: PTM Comparator P match
1: PTM Comparator A match

This bit is used to select the method which clears the counter. Remember that the Periodic TM contains two comparators, Comparator A and Comparator P, either of which can be selected to clear the internal counter. With the PTCCLR bit set high, the counter will be cleared when a compare match occurs from the Comparator A. When the bit is low, the counter will be cleared when a compare match occurs from the Comparator P or with a counter overflow. A counter overflow clearing method can only be implemented if the CCRP bits are all cleared to zero. The PTCCLR bit is not used in the PWM Output Mode, Single Pulse or Capture Input Mode.

- **PTMDL Register**

Bit	7	6	5	4	3	2	1	0
Name	D7	D6	D5	D4	D3	D2	D1	D0
R/W	R	R	R	R	R	R	R	R
POR	0	0	0	0	0	0	0	0

Bit 7~0 **D7~D0**: PTM Counter Low Byte Register bit 7 ~ bit 0
PTM 10-bit Counter bit 7 ~ bit 0

- **PTMDH Register**

Bit	7	6	5	4	3	2	1	0
Name	—	—	—	—	—	—	D9	D8
R/W	—	—	—	—	—	—	R	R
POR	—	—	—	—	—	—	0	0

Bit 7~2 Unimplemented, read as "0"

Bit 1~0 **D9~D8**: PTM Counter High Byte Register bit 1 ~ bit 0
PTM 10-bit Counter bit 9 ~ bit 8

- **PTMAL Register**

Bit	7	6	5	4	3	2	1	0
Name	D7	D6	D5	D4	D3	D2	D1	D0
R/W	R/W	R/W	R/W	R/W	R/W	R/W	R/W	R/W
POR	0	0	0	0	0	0	0	0

Bit 7~0 **D7~D0**: PTM CCRA Low Byte Register bit 7 ~ bit 0
PTM 10-bit CCRA bit 7 ~ bit 0

- **PTMAH Register**

Bit	7	6	5	4	3	2	1	0
Name	—	—	—	—	—	—	D9	D8
R/W	—	—	—	—	—	—	R/W	R/W
POR	—	—	—	—	—	—	0	0

Bit 7~2 Unimplemented, read as "0"

Bit 1~0 **D9~D8**: PTM CCRA High Byte Register bit 1 ~ bit 0
PTM 10-bit CCRA bit 9 ~ bit 8

- **PTMRPL Register**

Bit	7	6	5	4	3	2	1	0
Name	D7	D6	D5	D4	D3	D2	D1	D0
R/W	R/W	R/W	R/W	R/W	R/W	R/W	R/W	R/W
POR	0	0	0	0	0	0	0	0

Bit 7~0 **D7~D0**: PTM CCRP Low Byte Register bit 7 ~ bit 0
PTM 10-bit CCRP bit 7 ~ bit 0

- **PTMRPH Register**

Bit	7	6	5	4	3	2	1	0
Name	—	—	—	—	—	—	D9	D8
R/W	—	—	—	—	—	—	R/W	R/W
POR	—	—	—	—	—	—	0	0

Bit 7~2 Unimplemented, read as "0"

Bit 1~0 **D9~D8**: PTM CCRP High Byte Register bit 1 ~ bit 0
PTM 10-bit CCRP bit 9 ~ bit 8

Periodic Type TM Operating Modes

The Periodic Type TM can operate in one of five operating modes, Compare Match Output Mode, PWM Output Mode, Single Pulse Output Mode, Capture Input Mode or Timer/Counter Mode. The operating mode is selected using the PTM1 and PTM0 bits in the PTMC1 register.

Compare Match Output Mode

To select this mode, bits PTM1 and PTM0 in the PTMC1 register, should be set to 00 respectively. In this mode once the counter is enabled and running it can be cleared by three methods. These are a counter overflow, a compare match from Comparator A and a compare match from Comparator P. When the PTCCLR bit is low, there are two ways in which the counter can be cleared. One is when a compare match from Comparator P, the other is when the CCRP bits are all zero which allows the counter to overflow. Here both PTMAF and PTMPF interrupt request flags for Comparator A and Comparator P respectively, will both be generated.

If the PTCCLR bit in the PTMC1 register is high then the counter will be cleared when a compare match occurs from Comparator A. However, here only the PTMAF interrupt request flag will be

generated even if the value of the CCRP bits is less than that of the CCRA registers. Therefore when PTCCLR is high no PTMPF interrupt request flag will be generated. In the Compare Match Output Mode, the CCRA cannot be cleared to zero.

If the CCRA bits are all zero, the counter will overflow when its reaches its maximum 10-bit, 3FF Hex, value, however here the PTMAF interrupt request flag will not be generated.

As the name of the mode suggests, after a comparison is made, the PTM output pin, will change state. The PTM output pin condition however only changes state when a PTMAF interrupt request flag is generated after a compare match occurs from Comparator A. The PTMPF interrupt request flag, generated from a compare match occurs from Comparator P, will have no effect on the PTM output pin. The way in which the PTM output pin changes state are determined by the condition of the PTIO1 and PTIO0 bits in the PTMC1 register. The PTM output pin can be selected using the PTIO1 and PTIO0 bits to go high, to go low or to toggle from its present condition when a compare match occurs from Comparator A. The initial condition of the PTM output pin, which is setup after the PTON bit changes from low to high, is setup using the PTOC bit. Note that if the PTIO1 and PTIO0 bits are zero then no pin change will take place.

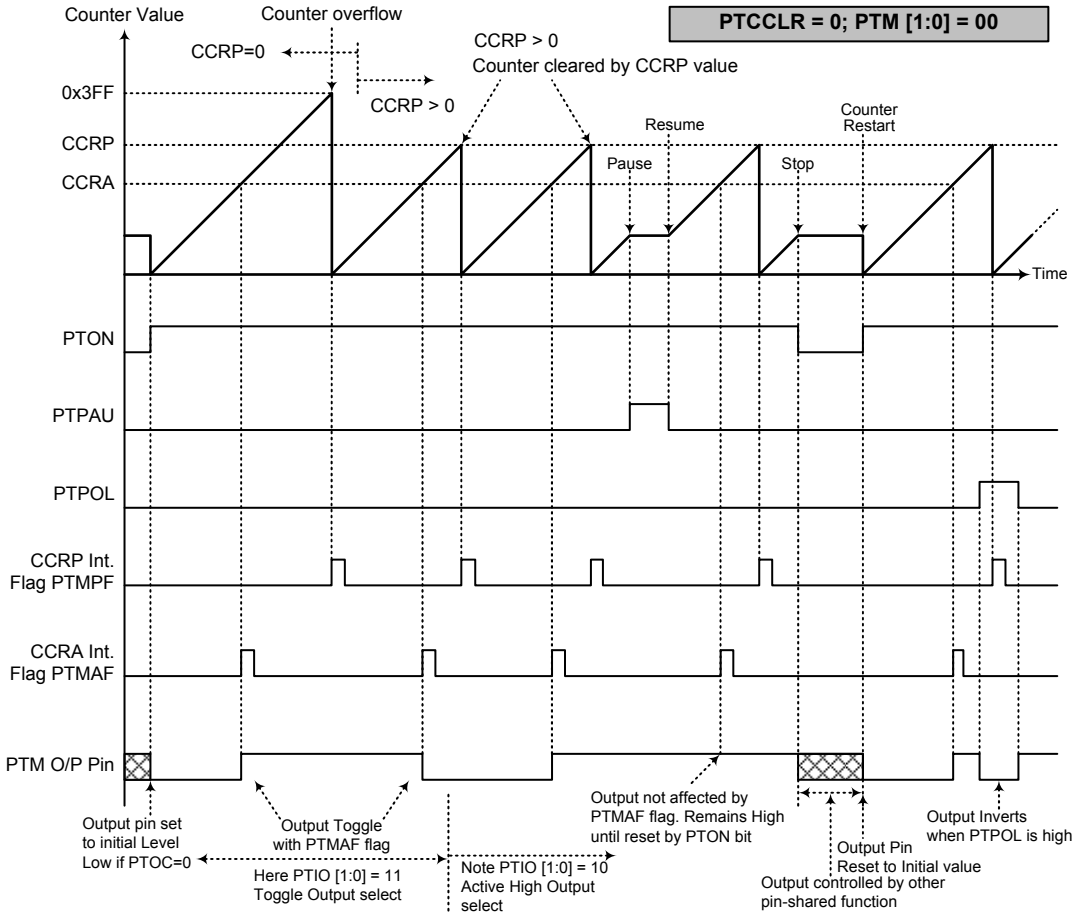

Compare Match Output Mode – PTCCLR = 0

Note: 1. With PTCCLR=0 a Comparator P match will clear the counter
2. The PTM output pin is controlled only by the PTMAF flag
3. The output pin is reset to its initial state by a PTON bit rising edge

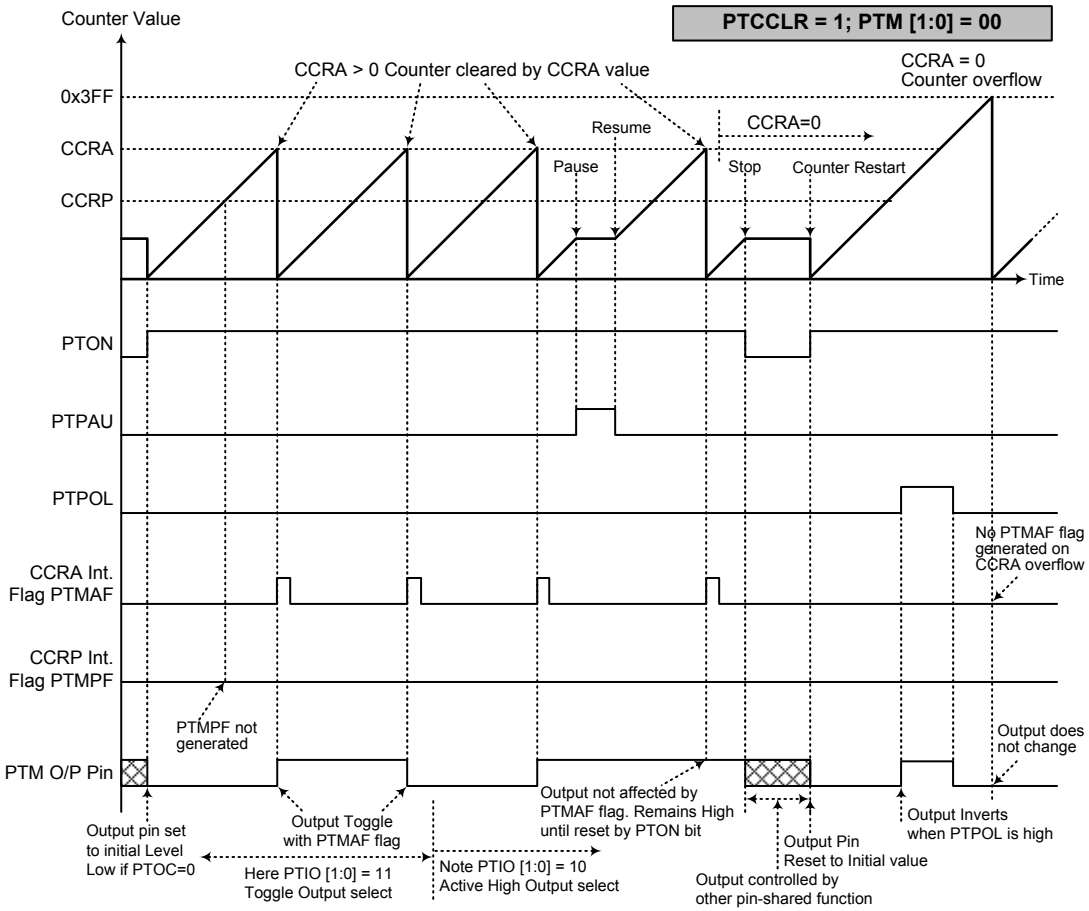

Compare Match Output Mode – PTCCLR = 1

Note: 1. With PTCCLR=1 a Comparator A match will clear the counter
2. The PTM output pin is controlled only by the PTMAF flag
3. The output pin is reset to its initial state by a PTON bit rising edge
4. A PTMPF flag is not generated when PTCCLR=1

Timer/Counter Mode

To select this mode, bits PTM1 and PTM0 in the PTMC1 register should be set to 11 respectively. The Timer/Counter Mode operates in an identical way to the Compare Match Output Mode generating the same interrupt flags. The exception is that in the Timer/Counter Mode the TM output pin is not used. Therefore the above description and Timing Diagrams for the Compare Match Output Mode can be used to understand its function. As the TM output pin is not used in this mode, the pin can be used as a normal I/O pin or other pin-shared function.

PWM Output Mode

To select this mode, bits PTM1 and PTM0 in the PTMC1 register should be set to 10 respectively. The PWM function within the PTM is useful for applications which require functions such as motor control, heating control, illumination control etc. By providing a signal of fixed frequency but of varying duty cycle on the PTM output pin, a square wave AC waveform can be generated with varying equivalent DC RMS values.

As both the period and duty cycle of the PWM waveform can be controlled, the choice of generated waveform is extremely flexible. In the PWM Output Mode, the PTCCLR bit has no effect on the PWM operation. Both of the CCRA and CCRP registers are used to generate the PWM waveform, one register is used to clear the internal counter and thus control the PWM waveform frequency, while the other one is used to control the duty cycle. The PWM waveform frequency and duty cycle can therefore be controlled by the values in the CCRA and CCRP registers.

An interrupt flag, one for each of the CCRA and CCRP, will be generated when a compare match occurs from either Comparator A or Comparator P. The PTOC bit in the PTMC1 register is used to select the required polarity of the PWM waveform while the two PTIO1 and PTIO0 bits are used to enable the PWM output or to force the PTM output pin to a fixed high or low level. The PTPOL bit is used to reverse the polarity of the PWM output waveform.

- **10-bit PTM, PWM Output Mode, Edge-aligned Mode**

CCRP	1~1023	0
Period	1~1023	1024
Duty	CCRA	

If f_{SYS} = 8MHz, PTM clock source select $f_{SYS}/4$, CCRP = 512 and CCRA = 128,

The PTM PWM output frequency = $(f_{SYS}/4)/512 = f_{SYS}/2048$ = 4kHz, duty = 128/512 = 25%.

If the Duty value defined by the CCRA register is equal to or greater than the Period value, then the PWM output duty is 100%.

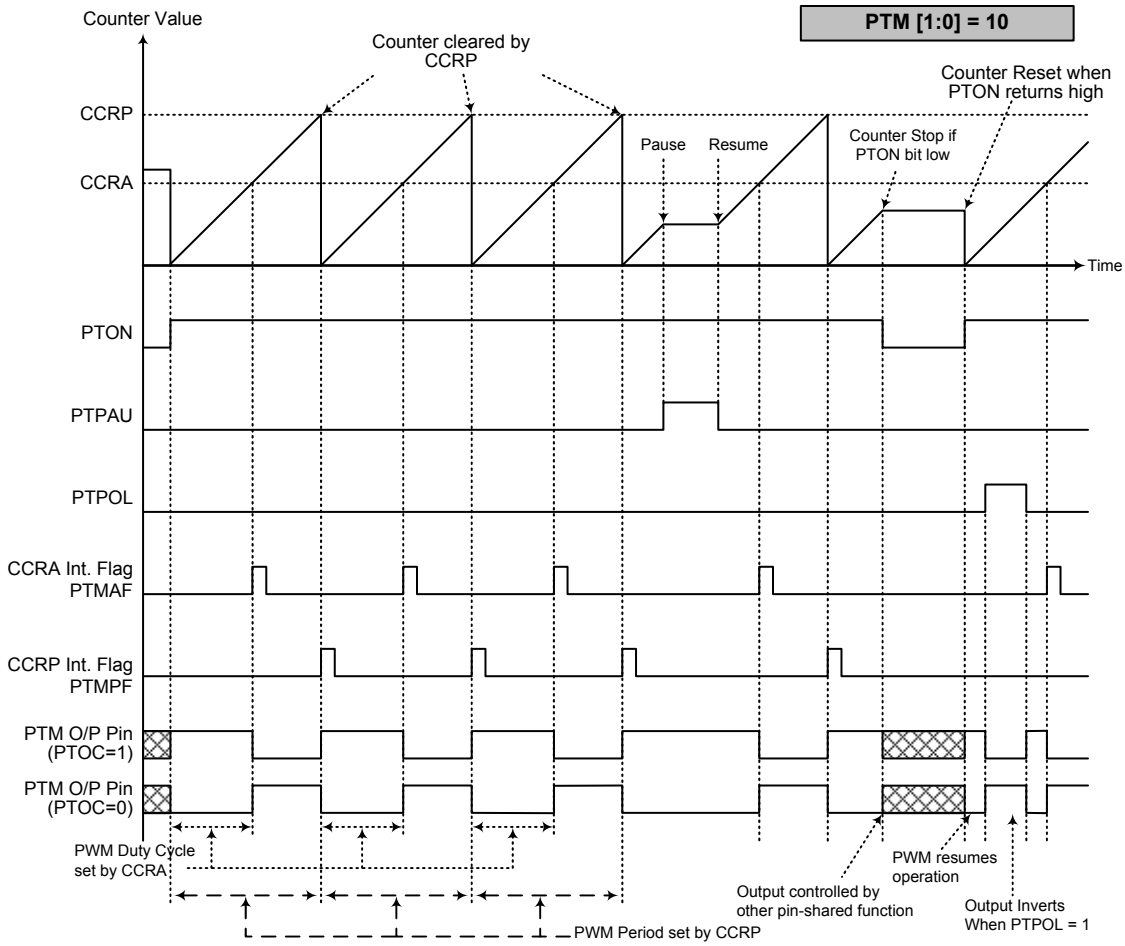

PWM Output Mode

Note: 1. Counter cleared by CCRP
2. A counter clear sets the PWM Period
3. The internal PWM function continues running even when PTIO[1:0] = 00 or 01
4. The PTCCLR bit has no influence on PWM operation

Single Pulse Output Mode

To select this mode, bits PTM1 and PTM0 in the PTMC1 register should be set to 10 respectively and also the PTIO1 and PTIO0 bits should be set to 11 respectively. The Single Pulse Output Mode, as the name suggests, will generate a single shot pulse on the PTM output pin.

The trigger for the pulse output leading edge is a low to high transition of the PTON bit, which can be implemented using the application program. However in the Single Pulse Mode, the PTON bit can also be made to automatically change from low to high using the external PTCK pin, which will in turn initiate the Single Pulse output. When the PTON bit transitions to a high level, the counter will start running and the pulse leading edge will be generated. The PTON bit should remain high when the pulse is in its active state. The generated pulse trailing edge will be generated when the PTON bit is cleared to zero, which can be implemented using the application program or when a compare match occurs from Comparator A.

However a compare match from Comparator A will also automatically clear the PTON bit and thus generate the Single Pulse output trailing edge. In this way the CCRA value can be used to control the pulse width. A compare match from Comparator A will also generate a PTM interrupt. The counter can only be reset back to zero when the PTON bit changes from low to high when the counter restarts. In the Single Pulse Mode CCRP is not used. The PTCCLR bit is not used in this Mode.

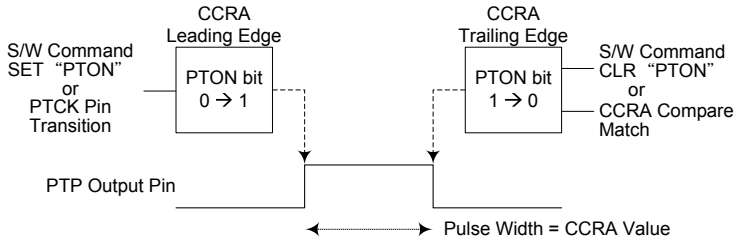

Single Pulse Generation

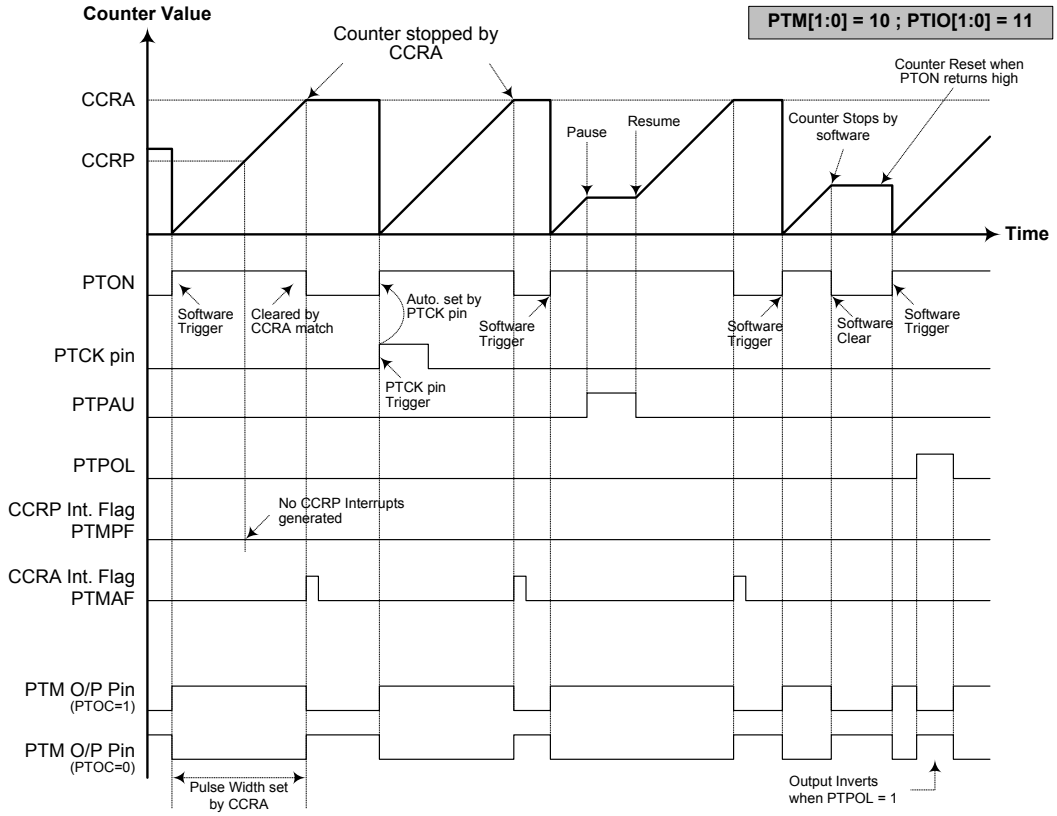

Single Pulse Mode

Note: 1. Counter stopped by CCRA
2. CCRP is not used
3. The pulse is triggered by the PTCK pin or by setting the PTON bit high
4. A PTCK pin active edge will automatically set the PTON bit high
5. In the Single Pulse Mode, PTIO[1:0] must be set to "11" and cannot be changed.

Capture Input Mode

To select this mode bits PTM1 and PTM0 in the PTMC1 register should be set to 01 respectively. This mode enables external signals to capture and store the present value of the internal counter and can therefore be used for applications such as pulse width measurements. The external signal is supplied on the PTP or PTCK pin which is selected using the PTCAPTS bit in the PTMC1 register. The input pin active edge can be either a rising edge, a falling edge or both rising and falling edges; the active edge transition type is selected using the PTIO1 and PTIO0 bits in the PTMC1 register. The counter is started when the PTON bit changes from low to high which is initiated using the application program.

When the required edge transition appears on the PTP or PTCK pin the present value in the counter will be latched into the CCRA registers and a PTM interrupt generated. Irrespective of what events occur on the PTP or PTCK pin, the counter will continue to free run until the PTON bit changes from high to low. When a CCRP compare match occurs the counter will reset back to zero; in this way the CCRP value can be used to control the maximum counter value. When a CCRP compare match occurs from Comparator P, a PTM interrupt will also be generated. Counting the number of overflow interrupt signals from the CCRP can be a useful method in measuring long pulse widths. The PTIO1 and PTIO0 bits can select the active trigger edge on the PTP or PTCK pin to be a rising edge, falling edge or both edge types. If the PTIO1 and PTIO0 bits are both set high, then no capture operation will take place irrespective of what happens on the PTP or PTCK pin, however it must be noted that the counter will continue to run.

As the PTP or PTCK pin is pin shared with other functions, care must be taken if the PTM is in the Capture Input Mode. This is because if the pin is setup as an output, then any transitions on this pin may cause an input capture operation to be executed. The PTCCLR, PTOC and PTPOL bits are not used in this Mode.

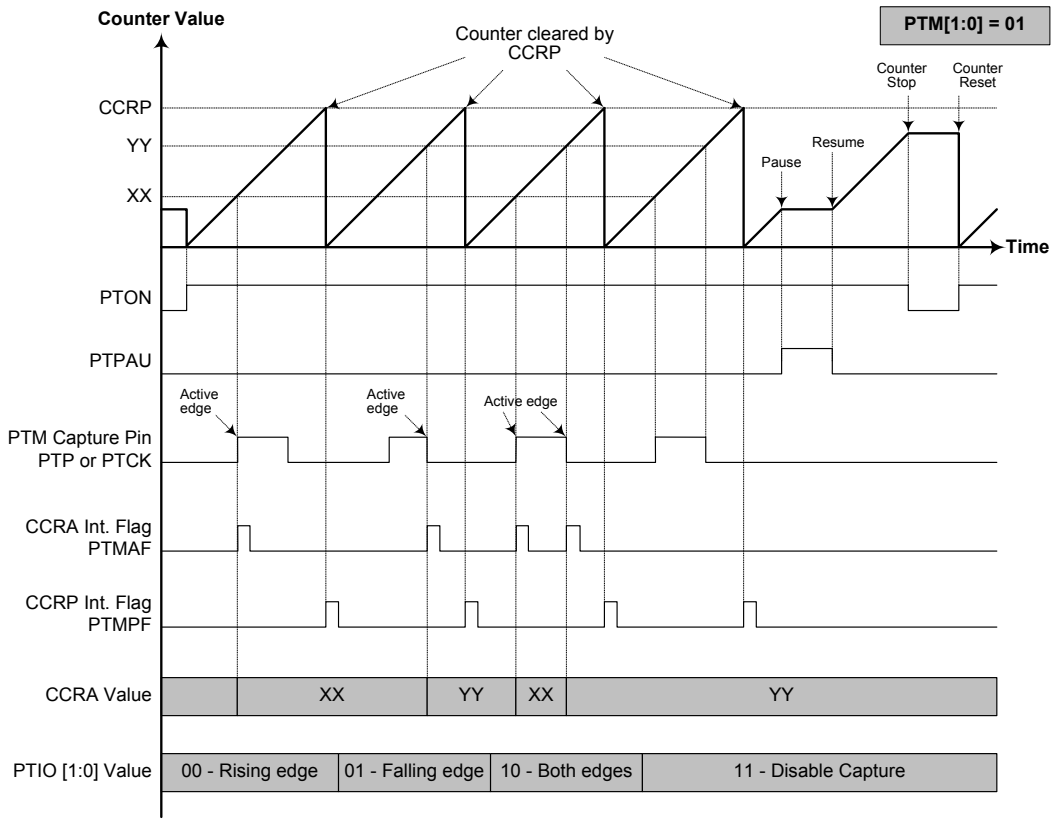

Capture Input Mode

Note: 1. PTM[1:0] = 01 and active edge set by the PTIO[1:0] bits
2. A PTM Capture input pin active edge transfers the counter value to CCRA
3. PTCCLR bit not used
4. No output function – PTOC and PTPOL bits are not used
5. CCRP determines the counter value and the counter has a maximum count value when CCRP is equal to zero.

Analog to Digital Converter

The need to interface to real world analog signals is a common requirement for many electronic systems. However, to properly process these signals by a microcontroller, they must first be converted into digital signals by A/D converters. By integrating the A/D conversion electronic circuitry into the microcontroller, the need for external components is reduced significantly with the corresponding follow-on benefits of lower costs and reduced component space requirements.

A/D Overview

The device contains a multi-channel analog to digital converter which can directly interface to external analog signals, such as that from sensors or other control signals and convert these signals directly into a 12-bit digital value. It also can convert the internal signals of the OCVPAO signal from the OCVP function into a 12-bit digital value. The external or internal analog signal to be converted is determined by the SAINS2~SAINS0 bits together with the SACS3~SACS0 bits. Note that when the internal analog signal is to be converted, the ACEn bit should also be properly configured except the SAINS and SACS bit fields. More detailed information about the A/D input signal is described in the "A/D Converter Control Registers" and "A/D Converter Input Signals" sections respectively.

External Input Channels	Internal Input Signal	A/D Input Select Bits
AN0~AN3	OCVPAO	SACS3~SACS0 SAINS2~SAINS0 ACE3~ACE0

The accompanying block diagram shows the overall internal structure of the A/D converter together with its associated registers.

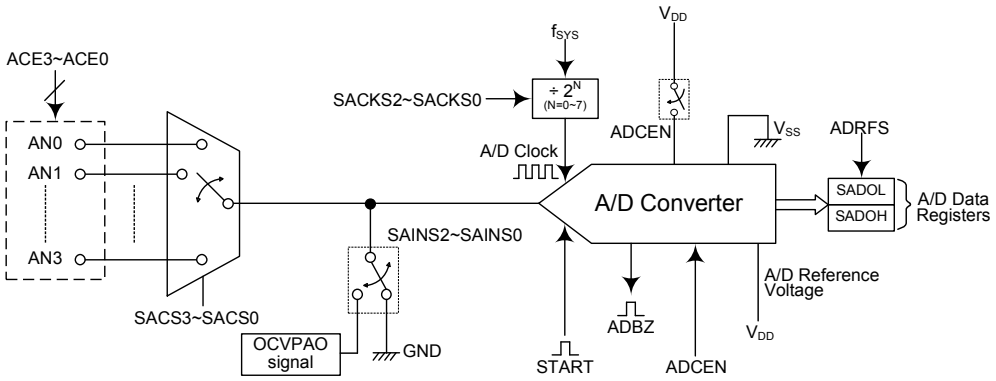

A/D Converter Structure

A/D Converter Register Description

Overall operation of the A/D converter is controlled using four registers. A read only register pair exists to store the A/D converter data 12-bit value. The remaining two registers are control registers which setup the operating and control function of the A/D converter.

Register Name	Bit							
	7	6	5	4	3	2	1	0
SADOL (ADRFS=0)	D3	D2	D1	D0	—	—	—	—
SADOL (ADRFS=1)	D7	D6	D5	D4	D3	D2	D1	D0
SADOH (ADRFS=0)	D11	D10	D9	D8	D7	D6	D5	D4
SADOH (ADRFS=1)	—	—	—	—	D11	D10	D9	D8
SADC0	START	ADBZ	ADCEN	ADRFS	SACS3	SACS2	SACS1	SACS0
SADC1	SAINS2	SAINS1	SAINS0	—	—	SACKS2	SACKS1	SACKS0
ACERL	—	—	—	—	ACE3	ACE2	ACE1	ACE0

A/D Converter Register List

A/D Converter Data Registers

As the device contains an internal 12-bit A/D converter, it requires two data registers to store the converted value. These are a high byte register, known as SADOH, and a low byte register, known as SADOL. After the conversion process takes place, these registers can be directly read by the microcontroller to obtain the digitised conversion value. As only 12 bits of the 16-bit register space is utilised, the format in which the data is stored is controlled by the ADRFS bit in the SADC0 register as shown in the accompanying table. D0~D11 are the A/D conversion result data bits. Any unused bits will be read as zero. Note that the A/D converter data register contents will be unchanged if the A/D converter is disabled.

ADRFS	SADOH								SADOL							
	7	6	5	4	3	2	1	0	7	6	5	4	3	2	1	0
0	D11	D10	D9	D8	D7	D6	D5	D4	D3	D2	D1	D0	0	0	0	0
1	0	0	0	0	D11	D10	D9	D8	D7	D6	D5	D4	D3	D2	D1	D0

A/D Converter Data Registers

A/D Converter Control Registers

To control the function and operation of the A/D converter, three control registers known as SADC0, SADC1 and ACERL are provided. These 8-bit registers define functions such as the selection of which analog channel is connected to the internal A/D converter, the digitised data format, the A/D clock source as well as controlling the start function and monitoring the A/D converter busy status. The SACS3~SACS0 bits in the SADC0 register are used to determine which external channel input is selected to be converted. The SAINS2~SAINS0 bits in the SADC1 register are used to determine that the analog signal to be converted comes from the internal analog signal or external analog channel input.

The ACERL control register contains the ACE3~ACE0 bits which determine which pins on Port B are used as analog inputs for the A/D converter input and which pins are not to be used as the A/D converter input. Setting the corresponding bit high will select the A/D input function, clearing the bit to zero will select either the I/O or other pin-shared function. When the pin is selected to be an A/D input, its original function whether it is an I/O or other pin-shared function will be removed. In addition, any internal pull-high resistors connected to these pins will be automatically removed if the pin is selected to be an A/D input.

- **SADC0 Register**

Bit	7	6	5	4	3	2	1	0
Name	START	ADBZ	ADCEN	ADRFS	SACS3	SACS2	SACS1	SACS0
R/W	R/W	R	R/W	R/W	R/W	R/W	R/W	R/W
POR	0	0	0	0	0	0	0	0

Bit 7 **START**: Start the A/D Conversion
0→1→0: Start an A/D conversion
This bit is used to initiate an A/D conversion process. The bit is normally low but if set high and then cleared low again, the A/D converter will initiate a conversion process.

Bit 6 **ADBZ**: A/D Converter busy flag
0: No A/D conversion is in progress
1: A/D conversion is in progress
This read only flag is used to indicate whether the A/D conversion is in progress or not. When the START bit is set from low to high and then to low again, the ADBZ flag will be set to 1 to indicate that the A/D conversion is initiated. The ADBZ flag will be cleared to 0 after the A/D conversion is complete.

Bit 5 **ADCEN**: A/D Converter function enable control
0: Disable
1: Enable
This bit controls the A/D internal function. This bit should be set high to enable the A/D converter. If the bit is set low, then the A/D converter will be switched off reducing the device power consumption. When the A/D converter function is disabled, the contents of the A/D data register pair, SADOH and SADOL, will be unchanged.

Bit 4 **ADRFS**: A/D Converter data format control
0: A/D converter data format → SADOH = D[11:4]; SADOL = D[3:0]
1: A/D converter data format → SADOH = D[11:8]; SADOL = D[7:0]
This bit controls the format of the 12-bit converted A/D value in the two A/D data registers. Details are provided in the A/D converter data register section.

Bit 3~0 **SACS3~SACS0**: A/D converter external analog input channel select
0000: AN0
0001: AN1
0010: AN2
0011: AN3
0100~1111: Non-existed channel, the input will be floating

- **SADC1 Register**

Bit	7	6	5	4	3	2	1	0
Name	SAINS2	SAINS1	SAINS0	—	—	SACKS2	SACKS1	SACKS0
R/W	R/W	R/W	R/W	—	—	R/W	R/W	R/W
POR	0	0	0	—	—	0	0	0

Bit 7~5 **SAINS2~SAINS0**: A/D converter input signal select
000: External source – External analog channel input
001: Internal source – OCVPAO, OCVP circuit output
010~100: Connected to ground
101~111: External source – External analog channel input
Care must be taken if the SAINS2~SAINS0 bits are set to "001" ~ "100" to select the internal analog signal to be converted. When the internal analog signal is selected to be converted, the SACS3~SACS0 bits must be set to a value from "0100" to "1111". Otherwise, the external channel input will be connected together with the internal analog signal. This will result in unpredictable situations such as an irreversible damage.

Bit 4~3 Unimplemented, read as "0"

Bit 2~0 **SACKS2~SACKS0**: A/D conversion clock source select
000: f_{SYS}
001: $f_{SYS}/2$
010: $f_{SYS}/4$
011: $f_{SYS}/8$
100: $f_{SYS}/16$
101: $f_{SYS}/32$
110: $f_{SYS}/64$
111: $f_{SYS}/128$
These bits are used to select the clock source for the A/D converter.

- **ACERL Register**

Bit	7	6	5	4	3	2	1	0
Name	—	—	—	—	ACE3	ACE2	ACE1	ACE0
R/W	—	—	—	—	R/W	R/W	R/W	R/W
POR	—	—	—	—	0	0	0	0

Bit 7~4 Unimplemented, read as "0"

Bit 3 **ACE3**: Define PB3 is A/D input or not
0: Not A/D input
1: A/D input, AN3

Bit 2 **ACE2**: Define PB2 is A/D input or not
0: Not A/D input
1: A/D input, AN2

Bit 1 **ACE1**: Define PB1 is A/D input or not
0: Not A/D input
1: A/D input, AN1

Bit 0 **ACE0**: Define PB0 is A/D input or not
0: Not A/D input
1: A/D input, AN0

A/D Operation

The START bit in the SADC0 register is used to start the A/D conversion. When the microcontroller sets this bit from low to high and then low again, an analog to digital conversion cycle will be initiated.

The ADBZ bit in the SADC0 register is used to indicate whether the analog to digital conversion process is in progress or not. This bit will be automatically set to 1 by the microcontroller after an A/D conversion is successfully initiated. When the A/D conversion is complete, the ADBZ will be cleared to 0. In addition, the corresponding A/D interrupt request flag will be set in the interrupt control register, and if the interrupts are enabled, an internal interrupt signal will be generated. This A/D internal interrupt signal will direct the program flow to the associated A/D internal interrupt address for processing. If the A/D internal interrupt is disabled, the microcontroller can poll the ADBZ bit in the SADC0 register to check whether it has been cleared as an alternative method of detecting the end of an A/D conversion cycle.

The clock source for the A/D converter, which originates from the system clock f_{SYS}, can be chosen to be either f_{SYS} or a subdivided version of f_{SYS}. The division ratio value is determined by the SACKS2~SACKS0 bits in the SADC1 register. Although the A/D clock source is determined by the system clock fSYS, and by bits SACKS2~SADCKS0, there are some limitations on the maximum A/D clock source speed that can be selected. As the recommended range of permissible A/D clock period, t_{ADCK}, is from 0.5μs to 10μs, care must be taken for selected system clock frequencies. For example, if the system clock operates at a frequency of 4MHz, the SACKS2~SACKS0 bits should not be set to 000 or 110 or 111. Doing so will give A/D clock periods that are less than the minimum

A/D clock period or greater than the maximum A/D clock period which may result in inaccurate A/D conversion values. Refer to the following table for examples, where values marked with an asterisk * show where special care must be taken, as the values may be out of the specified A/D Clock Period range.

f_{SYS}	A/D Clock Period (t_{ADCK})							
	SACKS [2:0]=000 (f_{SYS})	SACKS [2:0]=001 ($f_{SYS}/2$)	SACKS [2:0]=010 ($f_{SYS}/4$)	SACKS [2:0]=011 ($f_{SYS}/8$)	SACKS [2:0]=100 ($f_{SYS}/16$)	SACKS [2:0]=101 ($f_{SYS}/32$)	SACKS [2:0]=110 ($f_{SYS}/64$)	SACKS [2:0]=111 ($f_{SYS}/128$)
1 MHz	1μs	2μs	4μs	8μs	16μs *	32μs *	64μs *	128μs *
2 MHz	500ns	1μs	2μs	4μs	8μs	16μs *	32μs *	64μs *
4 MHz	250ns *	500ns	1μs	2μs	4μs	8μs	16μs *	32μs *
8 MHz	125ns *	250ns *	500ns	1μs	2μs	4μs	8μs	16μs *
12 MHz	83ns *	167ns *	333ns *	667ns	1.33μs	2.67μs	5.33μs	10.67μs *

A/D Clock Period Examples

Controlling the power on/off function of the A/D converter circuitry is implemented using the ADCEN bit in the SADC0 register. This bit must be set high to power on the A/D converter. When the ADCEN bit is set high to power on the A/D converter internal circuitry a certain delay, as indicated in the timing diagram, must be allowed before an A/D conversion is initiated. Even if no pins are selected for use as A/D inputs by configuring the corresponding pin-shared control bits, if the ADCEN bit is high then some power will still be consumed. In power conscious applications it is therefore recommended that the ADCEN is set low to reduce power consumption when the A/D converter function is not being used.

The reference voltage supply to the A/D Converter is from the positive power supply VDD. The analog input values must not be allowed to exceed the reference voltage value.

A/D Converter Input Signals

All of the A/D analog input pins are pin-shared with the I/O pins as well as other functions. The ACE3~ACE0 bits in the ACERL register determine whether the external pins are setup as A/D converter analog channel inputs or setup as other functions. If the ACE3~ACE0 bits for its corresponding pin is set high then the pin will be setup to be an A/D converter analog channel input, the original pin functions will be disabled. In this way, pins can be changed under program control to change their function between A/D inputs and other functions. All pull-high resistors, which are setup through register programming, will be automatically disconnected if the pins are setup as A/D inputs. Note that it is not necessary to first setup the A/D pin as an input in the port control register to enable the A/D input as when the relevant pin-shared function selection bits enable an A/D analog channel input, the status of the port control register will be overridden.

There is an internal analog signal derived from the OCVP circuit output can be connected to the A/D converter as the analog input signal. If the SAINS2~SAINS0 bits are set to "000" or "101~111", the external analog channel input is selected to be converted and the SACS3~SACS0 bits can determine which external channel is selected to be converted. If the SAINS2~SAINS0 bits are set to "001", the OCVPAO signal from the OCVP function is selected to be converted. If the SAINS2~SAINS0 bits are set to "010" ~ "011", the A/D converter input is connected to ground. Care must be taken when the internal analog signal is selected to be converted. If the internal analog signal is selected to be converted, the SACS3~SACS0 bits must be properly set to select a floating state. Otherwise, the external channel input will be connected together with the internal analog signal. This will result in unpredictable situations such as an irreversible damage.

SAINS [2:0]	SACS [3:0]	Input Signals	Description
000, 101~111	0000~0011	AN0~AN3	External pin analog input
	0100~1111	—	Floating
001	0110~1111	OCVPAO	OCVPAO signal from the OCVP function
010~100	0110~1111	GND	Connected to ground

A/D Converter Input Signal Selection

Conversion Rate and Timing Diagram

A complete A/D conversion contains two parts, data sampling and data conversion. The data sampling which is defined as t_{ADS} takes 4 A/D clock cycles and the data conversion takes 12 A/D clock cycles. Therefore a total of 16 A/D clock cycles for an A/D conversion which is defined as t_{ADC} are necessary.

Maximum single A/D conversion rate = A/D clock period / 16

The accompanying diagram shows graphically the various stages involved in an analog to digital conversion process and its associated timing. After an A/D conversion process has been initiated by the application program, the microcontroller internal hardware will begin to carry out the conversion, during which time the program can continue with other functions. The time taken for the A/D conversion is 16 t_{ADCK} clock cycles where t_{ADCK} is equal to the A/D clock period.

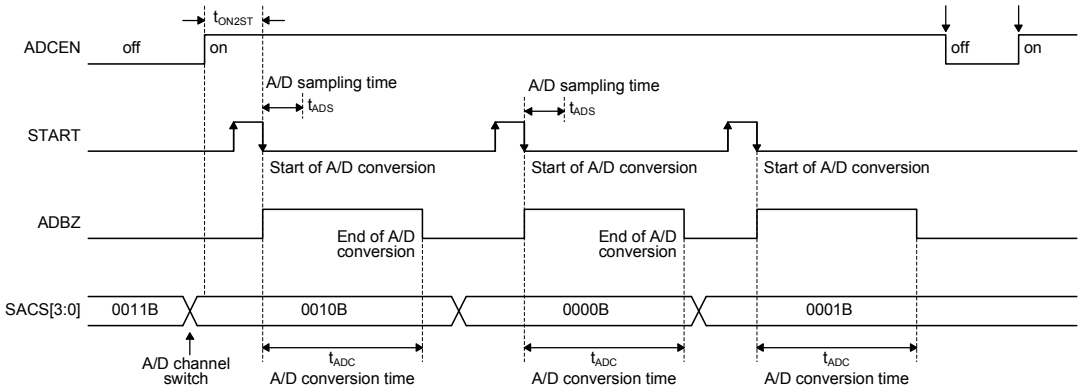

A/D Conversion Timing

Summary of A/D Conversion Steps

The following summarises the individual steps that should be executed in order to implement an A/D conversion process.

- Step 1
  Select the required A/D conversion clock by properly programming the SACKS2~SACKS0 bits in the SADC1 register.
- Step 2
  Enable the A/D converter by setting the ADCEN bit in the SADC0 register to one.
- Step 3
  Select which signal is to be connected to the internal A/D converter by correctly configuring the SAINS2~SAINS0 bits
  Select the external channel input to be converted, go to Step 4.
  Select the internal analog signal to be converted, go to Step 5.

- Step 4
  If the A/D input signal comes from the external channel input selecting by configuring the SAINS bit field, the corresponding pins should first be configured as A/D input function by programming the relevant ACE3~ACE0 bits in the ACERL register. The desired analog channel then should be selected by configuring the SACS bit field. After this step, go to Step 6.
- Step 5
  Before the A/D input signal is selected to come from the internal analog signal by configuring the SAINS bit field, the SACS bit field must be first configured to a value from "0100" to "1111" to disconnect the external channel input. The desired internal analog signal then can be selected by configuring the SAINS bit field. After this step, go to Step 6.
- Step 6
  Select the A/D converter output data format by configuring the ADRFS bit in the SADC0 register.
- Step 7
  If A/D conversion interrupt is used, the interrupt control registers must be correctly configured to ensure the A/D interrupt function is active. The master interrupt control bit, EMI, and the A/D converter interrupt control bit, ADE, must both be set high in advance.
- Step 8
  The A/D conversion procedure can now be initialized by setting the START bit from low to high and then low again.
- Step 9
  If A/D conversion is in progress, the ADBZ flag will be set high. After the A/D conversion process is complete, the ADBZ flag will go low and then the output data can be read from SADOH and SADOL registers.

Note: When checking for the end of the conversion process, if the method of polling the ADBZ bit in the SADC0 register is used, the interrupt enable step above can be omitted.

Programming Considerations

During microcontroller operations where the A/D converter is not being used, the A/D internal circuitry can be switched off to reduce power consumption, by setting bit ADCEN low in the SADC0 register. When this happens, the internal A/D converter circuits will not consume power irrespective of what analog voltage is applied to their input lines. If the A/D converter input lines are used as normal I/Os, then care must be taken as if the input voltage is not at a valid logic level, then this may lead to some increase in power consumption.

A/D Transfer Function

As the devices contain a 12-bit A/D converter, its full-scale converted digitised value is equal to FFFH. Since the full-scale analog input value is equal to the actual A/D converter reference voltage, V_{DD} voltage, this gives a single bit analog input value V_{DD} divided by 4096.

$$1\ \text{LSB} = V_{DD} \div 4096$$

The A/D Converter input voltage value can be calculated using the following equation:

$$\text{A/D input voltage} = \text{A/D output digital value} \times V_{DD} \div 4096$$

The diagram shows the ideal transfer function between the analog input value and the digitised output value for the A/D converter. Except for the digitised zero value, the subsequent digitised values will change at a point 0.5 LSB below where they would change without the offset, and the last full scale digitised value will change at a point 1.5 LSB below the V_{DD} level.

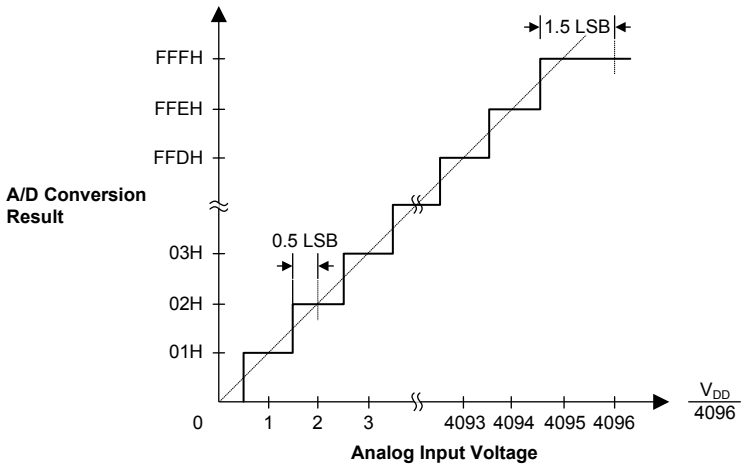

Ideal A/D Transfer Function

A/D Programming Examples

The following two programming examples illustrate how to setup and implement an A/D conversion. In the first example, the method of polling the ADBZ bit in the SADC0 register is used to detect when the conversion cycle is complete, whereas in the second example, the A/D interrupt is used to determine when the conversion is complete.

Example: using an ADBZ polling method to detect the end of conversion

```
clr ADE                ; disable ADC interrupt
mov a,03H
mov SADC1,a            ; select fSYS/8 as A/D conversion clock
mov a,01H              ; setup ACERL to configure pin AN0
mov ACERL,a
mov a,20H
mov SADC0,a            ; enable and connect AN0 channel to A/D converter
:
start_conversion:
clr START              ; high pulse on start bit to initiate conversion
set START              ; reset A/D
clr START              ; start A/D
:
polling_EOC:
sz  ADBZ               ; poll the SADC0 register ADBZ bit to detect end of A/D conversion
jmp polling_EOC        ; continue polling
:
mov a,SADOL            ; read low byte conversion result value
mov ADRL_buffer,a      ; save result to user defined register
mov a,SADOH            ; read high byte conversion result value
mov ADRH_buffer,a      ; save result to user defined register
:
jmp start_conversion   ; start next A/D conversion
```

Example: using the interrupt method to detect the end of conversion

```
clr ADE                ; disable ADC interrupt
mov a,03H
mov SADC1,a            ; select fSYS/8 as A/D conversion clock
mov a,01H              ; setup ACERL to configure pin AN0
mov ACERL,a
mov a,20H
mov SADC0,a            ; enable and connect AN0 channel to A/D converter
:
Start_conversion:
clr START              ; high pulse on START bit to initiate conversion
set START              ; reset A/D
clr START              ; start A/D
clr ADF                ; clear ADC interrupt request flag
set ADE                ; enable ADC interrupt
set EMI                ; enable global interrupt
:
:
ADC_ISR:               ; ADC interrupt service routine
mov acc_stack,a        ; save ACC to user defined memory
mov a,STATUS
mov status_stack,a     ; save STATUS to user defined memory
:
mov a, SADOL           ; read low byte conversion result value
mov adrl_buffer,a      ; save result to user defined register
mov a, SADOH           ; read high byte conversion result value
mov adrh_buffer,a      ; save result to user defined register
:
EXIT_INT_ISR:
mov a,status_stack
mov STATUS,a           ; restore STATUS from user defined memory
mov a,acc_stack        ; restore ACC from user defined memory
reti
```

Nebuliser Resonance Detector

Please refer Holtek Application Notes.

Water Shortage Protection

Developed by users.

Over Current / Voltage Protection

The device includes an over current/voltage protection function which provides an over current or over voltage protection protection mechanism for applications. The OCVPAI0 input signal can be converted to a relevant voltage level according to the current value using the OCVP operational amplifier. It is then compared with a reference voltage generated by an 8-bit D/A converter. The voltage on the OCVPCI pin is compared with a reference voltage generated by the 8-bit D/A converter. When the OCVPF flag changes from 0 to 1 and if the corresponding interrupt control is enabled, an OCVP interrupt will be generated to indicate a specific current or voltage condition has occurred.

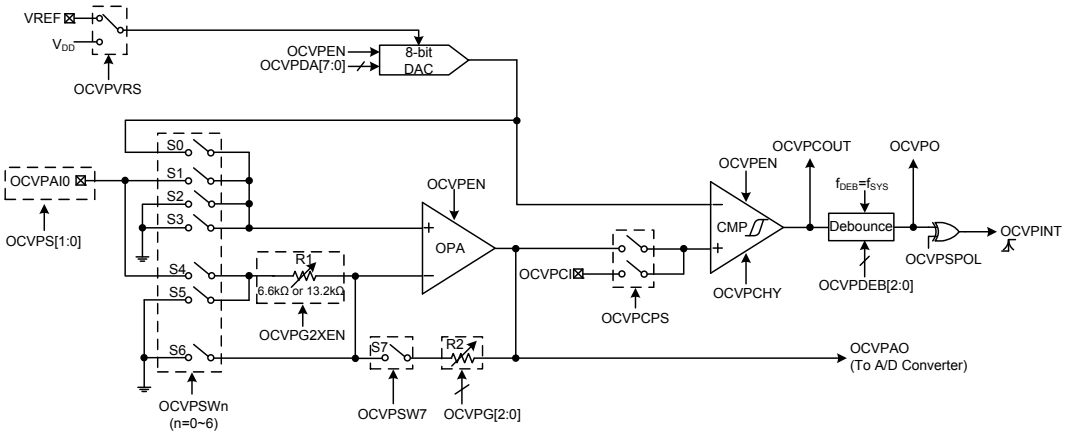

Notes: As the OCVP function relevant external pins are pin-shared with general I/O or other functions, before using the OCVP function, make sure the corresponding pin-shared function registers be set properly.

OCVP Block Diagram

OCVP Operation

The OCVP circuit is used to prevent the input current or voltage from being in an unexpected level range. The current on the OCVPAI0 pin is converted to a voltage and then amplified by the OCVP operational amplifier with a programmable gain from 1 to 130 selected by the OCVPG2~OCVPG0 bits together with the OCVPG2XEN bit in the OCVPC2 register. This is known as the Programmable Gain Amplifier or PGA. This PGA can also be configured to operate in the non-inverting, inverting or input offset calibration mode determined by the OCVPSW7~OCVPSW0 bits in the OCVPC0 register. After the current is converted and amplified to a specific voltage level, it will be compared with a reference voltage provided by an 8-bit D/A converter. The voltage on the OCVPCI pin is also can be selected to compare with a reference provided by the 8-bit D/A converter.

To compare the OCVPAO output signal or the OCVPCI input signal with the D/A converter output voltage is selected using the OCVPCPS bit in the OCVPC1 register. The 8-bit D/A converter input reference voltage can be supplied by the V_{DD} or the external pin VREF, selected by the OCVPVRS bit in the OCVPC1 register. The comparator output, OCVPCOUT, will first be filtered with a certain de-bounce time period selected by the OCVPDEB2~OCVPDEB0 bits in the OCVPC2 register. Then a filtered OCVP digital comparator output, OCVPO, is obtained to indicate whether a user-defined current or voltage condition occurs or not.

If the OCVPSPOL bit is cleared to 0 and the comparator inputs force the OCVPO bit to change from 0 to 1, or if the OCVPSPOL bit is set to 1 and the comparator inputs force the OCVPO bit changes from 1 to 0, the corresponding interrupt will be generated if the relevant interrupt control bit is enabled. It is important to note that, only an OCVPINT rising edge can trigger an OCVP interrupt request, so the OCVPSPOL bit must be properly configured according to user's application requirements. The comparator in the OCVP circuit also has hysteresis function controlled by OCVPCHY bit.

Note that the debounce clock, f_{DEB}, comes from the system clock, f_{SYS}. The operational amplifier output voltage also can be read out by means of another A/D converter from the OCVPAO signal. The DAC output voltage is controlled by the OCVPDA register and the DAC output is defined as below:

$$\text{DAC } V_{OUT} = (\text{DAC reference voltage}/256) \times \text{OCVPDA}[7:0]$$

OCVP Control Registers

Overall operation of the OCVP function is controlled using several registers. The CTRL2 register is used to select the OCVPAI0 input signal source pin. One register is used to provide the reference voltages for the OCVP circuit. Two registers are used for the operational amplifier and comparator input offset calibration. The remaining three registers are control registers which control the OCVP function, D/A converter reference voltage select, switches on/off control, PGA gain select, comparator non-inverting input select, comparator de-bounce time, comparator hysteresis function and comparator output polarity control, etc. For a more detailed description regarding the input offset voltage calibration procedures, refer to the corresponding input offset calibration sections.

Register Name	Bit							
	7	6	5	4	3	2	1	0
CTRL2	FPTMEN	FPTMF	—	—	—	—	OCVPS1	OCVPS0
OCVPDA	D7	D6	D5	D4	D3	D2	D1	D0
OCVPC0	OCVPSW7	OCVPSW6	OCVPSW5	OCVPSW4	OCVPSW3	OCVPSW2	OCVPSW1	OCVPSW0
OCVPC1	OCVPEN	OCVPCHY	OCVPO	OCVPSPOL	—	—	OCVPCPS	OCVPVRS
OCVPC2	—	OCVPG2XEN	OCVPG2	OCVPG1	OCVPG0	OCVPDEB2	OCVPDEB1	OCVPDEB0
OCVPOCAL	OCVPOOFM	OCVPORSP	OCVPOOF5	OCVPOOF4	OCVPOOF3	OCVPOOF2	OCVPOOF1	OCVPOOF0
OCVPCCAL	OCVPCOUT	OCVPCOFM	OCVPCRSP	OCVPCOF4	OCVPCOF3	OCVPCOF2	OCVPCOF1	OCVPCOF0

OCVP Register List

- **CTRL2 Register**

Bit	7	6	5	4	3	2	1	0
Name	FPTMEN	FPTMF	—	—	—	—	OCVPS1	OCVPS0
R/W	R/W	R	—	—	—	—	R/W	R/W
POR	1	0	—	—	—	—	0	0

Bit 7 **FPTMEN**: PTMOSC oscillator enable control
Described in Oscillator section

Bit 6 **FPTMF**: PTMOSC oscillator stable flag
Described in Oscillator section

Bit 5~2 Unimplemented, read as "0"

Bit 1~0 **OCVPS1~OCVPS0**: OCVPAI0 signal input source pin selection
00: PB0
01: PB1
10: PB2
11: PB3

- **OCVPC0 Register**

Bit	7	6	5	4	3	2	1	0
Name	OCVPSW7	OCVPSW6	OCVPSW5	OCVPSW4	OCVPSW3	OCVPSW2	OCVPSW1	OCVPSW0
R/W	R/W	R/W	R/W	R/W	R/W	R/W	R/W	R/W
POR	1	1	0	0	1	0	0	0

Bit 7 **OCVPSW7**: OCVP switch S7 on/off control
0: Off
1: On

Bit 6 **OCVPSW6**: OCVP switch S6 on/off control
0: Off
1: On

Bit 5 **OCVPSW5**: OCVP switch S5 on/off control
0: Off
1: On

Bit 4 **OCVPSW4**: OCVP switch S4 on/off control
0: Off
1: On

Bit 3 **OCVPSW3**: OCVP switch S3 on/off control
0: Off
1: On

Bit 2 **OCVPSW2**: OCVP switch S2 on/off control
0: Off
1: On

Bit 1 **OCVPSW1**: OCVP switch S1 on/off control
0: Off
1: On

Bit 0 **OCVPSW0**: OCVP switch S0 on/off control
0: Off
1: On

- **OCVPC1 Register**

Bit	7	6	5	4	3	2	1	0
Name	OCVPEN	OCVPCHY	OCVPO	OCVPSPOL	—	—	OCVPCPS	OCVPVRS
R/W	R/W	R/W	R	R/W	—	—	R/W	R/W
POR	0	0	0	0	—	—	0	0

Bit 7 **OCVPEN**: OCVP function enable control
0: Disable
1: Enable
When this bit is cleared to 0, the overall OCVP operation will be disabled and the comparator output, OCVPCOUT, will be equal to 0.

Bit 6 **OCVPCHY**: OCVP Comparator Hysteresis function control
0: Disable
1: Enable

Bit 5 **OCVPO**: OCVP Comparator output after debounce
This bit is the debounce version of the OCVPCOUT bit.

Bit 4 **OCVPSPOL**: OCVPO polarity control
0: Non-invert
1: Invert

Bit 3~2 Unimplemented, read as "0"

Bit 1 **OCVPCPS**: OCVP Comparator non-inverting input selection
0: OCVPAO and/or OPAMP output
1: From OCVPCI pin

Bit 0 **OCVPVRS**: OCVP D/A Converter reference voltage selection
0: From V_{DD}
1: From VREF pin

- **OCVPC2 Register**

Bit	7	6	5	4	3	2	1	0
Name	—	OCVPG2XEN	OCVPG2	OCVPG1	OCVPG0	OCVPDEB2	OCVPDEB1	OCVPDEB0
R/W	—	R/W	R/W	R/W	R/W	R/W	R/W	R/W
POR	—	0	0	0	0	0	0	0

Bit 7 Unimplemented, read as "0"

Bit 6 **OCVPG2XEN**: R2/R1 ratio doubling enable control
0: Disable (R1=13.2kΩ)
1: Enable (R1=6.6kΩ)
When this bit is 1, the R2/R1 ratio selected by the OCVPG2~OCVPG0 bits will be doubled.

Bit 5~3 **OCVPG2~OCVPG0**: PGA R2/R1 ratio selection
When OCVPG2XEN=0:
000: R2/R1=1
001: R2/R1=4
010: R2/R1=6
011: R2/R1=10
100: R2/R1=15
101: R2/R1=25
110: R2/R1=40
111: R2/R1=65
When OCVPG2XEN=1:
000: R2/R1=2
001: R2/R1=8
010: R2/R1=12
011: R2/R1=20
100: R2/R1=30
101: R2/R1=50
110: R2/R1=80
111: R2/R1=130
The calculating formula of the PGA gain for the inverting and non-inverting mode is described in the "Input Voltage Range" section.
Note that the internal resistors, R1 and R2, should be used when the gain is determined by these bits. This means the S4 or S5 switch together with the S7 switch should be on. Otherwise, the gain accuracy will not be guaranteed.

Bit 2~0 **OCVPDEB2~OCVPDEB0**: OCVP Comparator output debounce time control
000: Bypass, without debounce
001: (1~2) × t_{DEB}
010: (3~4) × t_{DEB}
011: (7~8) × t_{DEB}
100: (15~16) × t_{DEB}
101: (31~32) × t_{DEB}
110: (63~64) × t_{DEB}
111: (127~128) × t_{DEB}
Note: $f_{DEB}=f_{SYS}$, $t_{DEB}=1/f_{DEB}$

- **OCVPDA Register**

Bit	7	6	5	4	3	2	1	0
Name	D7	D6	D5	D4	D3	D2	D1	D0
R/W	R/W	R/W	R/W	R/W	R/W	R/W	R/W	R/W
POR	0	0	0	0	0	0	0	0

Bit 7~0 OCVP D/A Converter Data Register bit 7 ~ bit 0
OCVP D/A Converter Output = (DAC reference voltage/256) × OCVPDA[7:0]

- **OCVPOCAL Register**

Bit	7	6	5	4	3	2	1	0
Name	OCVPOOFM	OCVPORSP	OCVPOOF5	OCVPOOF4	OCVPOOF3	OCVPOOF2	OCVPOOF1	OCVPOOF0
R/W	R/W	R/W	R/W	R/W	R/W	R/W	R/W	R/W
POR	0	0	1	0	0	0	0	0

Bit 7 **OCVPOOFM**: OCVP Operational Amplifier operating mode selection
0: Normal operating mode
1: Offset calibration mode
This bit is used to select the OCVP operating mode. To select the operational amplifier input offset calibration mode, the OCVPSW7~OCVPSW0 bits must first be set to 28H and then the OCVPOOFM bit must be set to 1 followed by the OCVPCOFM bit being cleared to 0. Refer to the "Operational Amplifier Input Offset Calibration" section for the detailed offset calibration procedures.

Bit 6 **OCVPORSP**: OCVP Operational Amplifier input offset voltage calibration reference selection
0: Operational amplifier inverting input is selected
1: Operational amplifier non-verting input is selected

Bit 5~0 **OCVPOOF5~OCVPOOF0**: OCVP Operational Amplifier input offset voltage calibration value
This 6-bit field is used to perform the operational amplifier input offset calibration operation and the value for the OCVP operational amplifier input offset calibration can be restored into this bit field. More detailed information is described in the "Operational Amplifier Input Offset Calibration" section.

- **OCVPCCAL Register**

Bit	7	6	5	4	3	2	1	0
Name	OCVPCOUT	OCVPCOFM	OCVPCRSP	OCVPCOF4	OCVPCOF3	OCVPCOF2	OCVPCOF1	OCVPCOF0
R/W	R	R/W	R/W	R/W	R/W	R/W	R/W	R/W
POR	0	0	0	1	0	0	0	0

Bit 7 **OCVPCOUT**: OCVP Comparator output
0: Non-inverting input voltage < DAC output voltage
1: Non-inverting input voltage > DAC output voltage
This bit is used to indicate whether the non-inverting input voltage is greater than the DAC output voltage. If the OCVPCOUT is set to 1, the non-verting input voltage is greater than the DAC output voltage. Otherwise, the non-inverting input voltage is less than the DAC output voltage.

Bit 6 **OCVPCOFM**: OCVP Comparator operating mode selection
0: Normal operating mode
1: Offset calibration mode
This bit is used to select the OCVP comparator operating mode. To select the comparator input offset calibration mode, the OCVPSW7~OCVPSW0 bits must first be set to 28H and then the OCVPCOFM bit must be set to 1 followed by the OCVPOOFM bit being cleared to 0. Refer to the "Comparator Input Offset Calibration" section for the detailed offset calibration procedures.

Bit 5 **OCVPCRSP**: OCVP Comparator input offset voltage calibration reference selection
0: Inverting input as the reference input
1: Non-inverting input is selected as the reference input

Bit 4~0 **OCVPCOF4~OCVPCOF0**: OCVP Comparator input offset voltage calibration value
This 5-bit field is used to perform the comparator input offset calibration operation and the value for the OCVP comparator input offset calibration can be restored into this bit field. More detailed information is described in the "Comparator Input Offset Calibration" section.

Input Voltage Range

Together with different PGA operating modes, the input voltage can be positive or negative to provide diverse applications for the device. The PGA output for the positive or negative input voltage is respectively calculated based on different formulas and described by the following examples.

- For $V_{IN} > 0$, the PGA operates in the non-inverting mode and the PGA output is obtained using the formula below:

$$V_{OUT} = (1+R_2/R_1)\times V_{IN}$$

- When the PGA operates in the non-inverting mode, a unity gain buffer is provided. If OCVPSW6~OCVPSW4 bits are set to "000", the PGA gain will be 1 and the PGA will act as a unity gain buffer. The switches S6, S5 and S4 will be off internally and the output voltage of PGA is:

$$V_{OUT} = V_{IN}$$

- If S3 and S4 are on, the input node is OCVPAI0. For input voltage $0 > V_{IN} > -0.4$, the PGA operates in the inverting mode and the PGA output is obtained using the formula below. Note that if the input voltage V_{IN} is negative, it can not be lower than -0.4V which will result in current leakage.

$$V_{OUT} = -(R_2/R_1)\times V_{IN}$$

Offset Calibration

To operate in the input offset calibration mode for the OCVP circuit, the OCVPSW7~OCVPSW0 bits should first be set to 28H. For operational amplifier and comparator input offset calibration, the procedures are similar except for setting the respective control bits.

Operational Amplifier Input Offset Calibration

Step 1. Set OCVPSW [7:0] = 28H (S3 and S5 are on, other switches are off), OCVPOOFM=1, OCVPCOFM=0 and OCVPORSP=1, OCVPCPS=0, the OCVP will operate in the operational amplifier input offset calibration mode.

Step 2. Set OCVPDA [7:0] = 40H

Step 3. Set OCVPOOF [5:0] = 000000 and read the OCVPCOUT bit.

Step 4. Increase the OCVPOOF [5:0] value by 1 and then read the OCVPCOUT bit.
If the OCVPCOUT bit state has not changed, then repeat Step 4 until the OCVPCOUT bit state has changed.
If the OCVPCOUT bit state has changed, record the OCVPOOF value as VOOS1 and then go to Step 5.

Step 5. Set OCVPOOF [5:0] = 111111 and read the OCVPCOUT bit.

Step 6. Decrease the OCVPOOF [5:0] value by 1 and then read the OCVPCOUT bit.
If the OCVPCOUT bit state has not changed, then repeat Step 6 until the OCVPCOUT bit state has changed.
If the OCVPCOUT bit state has changed, record the OCVPOOF value as VOOS2 and then go to Step 7.

Step 7. Restore the operational amplifier input offset calibration value VOOS into the OCVPOOF [5:0] bit field. The offset calibration procedure is now finished.

Where $V_{OOS}=(V_{OOS1}+V_{OOS2})/2$

Comparator input Offset Calibration

Before the offset calibration, the hysteresis voltage should be zero by setting the OCVPCHY bit to 0.

Step 1. Set OCVPSW [7:0] = 28H, OCVPCOFM=1, OCVPOOFM=0 and OCVPCRSP=0, the OCVP will now operate in the comparator input offset calibration mode.

Step 2. Set OCVPDA [7:0] = 40H

Step 3. Set OCVPCOF [4:0] = 00000 and read the OCVPCOUT bit.

Step 4. Increase the OCVPCOF [4:0] value by 1 and then read the OCVPCOUT bit.

If the OCVPCOUT bit state has not changed, then repeat Step 4 until the OCVPCOUT bit state has changed.

If the OCVPCOUT bit state has changed, record the OCVPCOF value as VCOS1 and then go to Step 5.

Step 5. Set OCVPCOF [4:0] = 11111 and read the OCVPCOUT bit.

Step 6. Decrease the OCVPCOF [4:0] value by 1 and then read the OCVPCOUT bit.

If the OCVPCOUT bit state has not changed, then repeat Step 6 until the OCVPCOUT bit state has changed.

If the OCVPCOUT bit state has changed, record the OCVPCOF value as VCOS2 and then go to Step 7.

Step 7. Restore the comparator input offset calibration value VCOS into the OCVPCOF [4:0] bit field. The offset calibration procedure is now finished.

Where $V_{COS}=(V_{COS1}+V_{COS2})/2$

Touch Key Function

The device provides 4 touch key functions. The touch key function is fully integrated and requires no external components, allowing touch key functions to be implemented by the simple manipulation of internal registers.

Touch Key Structure

The touch keys are pin shared with the I/O pins, with the desired function chosen via the pin-shared selection register bit. Keys are organised into one group, known as a module. The module is a fully independent set of four Touch Keys and has its own oscillator. The module contains its own control logic circuits and register set.

Total Key Number	Touch Key	Shared I/O Pin
4	KEY1~KEY4	PA7, PA4, PA1, PA3

Touch Key Structure

Touch Key Registers Description

The touch key module, which contains four touch key functions, has its own suite registers. The following table shows the register set for the touch key module.

Register Name	Description
TKTMR	Touch key 8-bit time slot counter preload register
TKC0	Touch key function control register 0
TKC1	Touch key function control register 1
TK16DL	Touch key function 16-bit counter low byte
TK16DH	Touch key function 16-bit counter high byte
TKM016DL	Touch key module 16-bit C/F counter low byte
TKM016DH	Touch key module 16-bit C/F counter high byte
TKM0ROL	Touch key module reference oscillator capacitor select low byte
TKM0ROH	Touch key module reference oscillator capacitor select high byte
TKM0C0	Touch key module control register 0
TKM0C1	Touch key module control register 1

Touch Key Function Register Definition

Register Name	Bit							
	7	6	5	4	3	2	1	0
TKTMR	D7	D6	D5	D4	D3	D2	D1	D0
TKC0	—	TKRCOV	TKST	TKCFOV	TK16OV	—	TK16S1	TK16S0
TKC1	—	—	—	—	—	—	TKFS1	TKFS0
TK16DL	D7	D6	D5	D4	D3	D2	D1	D0
TK16DH	D15	D14	D13	D12	D11	D10	D9	D8
TKM016DL	D7	D6	D5	D4	D3	D2	D1	D0
TKM016DH	D15	D14	D13	D12	D11	D10	D9	D8
TKM0ROL	D7	D6	D5	D4	D3	D2	D1	D0
TKM0ROH	—	—	—	—	—	—	D9	D8
TKM0C0	MMXS1	MMXS0	MDFEN	MFILEN	MSOFC	MSOF2	MSOF1	MSOF0
TKM0C1	MTSS	—	MROEN	MKOEN	MK4EN	MK3EN	MK2EN	MK1EN

Touch Key Function Register List

- **TKTMR Register**

Bit	7	6	5	4	3	2	1	0
Name	D7	D6	D5	D4	D3	D2	D1	D0
R/W	R/W	R/W	R/W	R/W	R/W	R/W	R/W	R/W
POR	0	0	0	0	0	0	0	0

Bit 7~0 **D7~D0**: Touch key 8-bit time slot counter preload register

The touch key time slot counter preload register is used to determine the touch key time slot overflow time. The time slot unit period is obtained by a 5-bit counter and equal to 32 time slot clock cycles. Therefore, the time slot counter overflow time is equal to the following equation shown.

Time slot counter overflow time = (256 - TKTMR[7:0]) × $32t_{TSC}$, where the t_{TSC} is the time slot counter clock period.

- **TKC0 Register**

Bit	7	6	5	4	3	2	1	0
Name	—	TKRCOV	TKST	TKCFOV	TK16OV	—	TK16S1	TK16S0
R/W	—	R/W	R/W	R/W	R/W	—	R/W	R/W
POR	—	0	0	0	0	—	0	0

Bit 7 Unimplemented, read as "0"

Bit 6 **TKRCOV**: Touch key time slot counter overflow flag
0: No overflow occurs
1: Overflow occurs

This bit can be accessed by application program. When this bit is set by touch key time slot counter overflow, the corresponding touch key interrupt request flag will be set. However, if this bit is set by application program, the touch key interrupt request flag will not be affected. Therefore, this bit cannot be set by application program but must be cleared to 0 by application program.

If the time slot counter overflows, the TKRCOV bit and the Touch Key Interrupt request flag, TKMF, will be set and all module keys and reference oscillators will automatically stop. The touch key module 16-bit C/F counter, touch key function 16-bit counter, 5-bit time slot unit period counter and 8-bit time slot counter will be automatically switched off.

Bit 5 **TKST**: Touch key detection start control
0: Stopped or no operation
0→1: Start detection

The touch key module 16-bit C/F counter, touch key function 16-bit counter and 5-bit time slot unit period counter will automatically be cleared when this bit is cleared to zero. However, the 8-bit programmable time slot counter will not be cleared. When this bit is changed from low to high, the touch key module 16-bit C/F counter, touch key function 16-bit counter, 5-bit time slot unit period counter and 8-bit time slot counter will be switched on together with the key and reference oscillators to drive the corresponding counters.

Bit 4 **TKCFOV**: Touch key module 16-bit C/F counter overflow flag
0: No overflow occurs
1: Overflow occurs

This bit is set by touch key module 16-bit C/F counter overflow and must be cleared to 0 by application program.

Bit 3 **TK16OV**: Touch key function 16-bit counter overflow flag
0: No overflow occurs
1: Overflow occurs

This bit is set by touch key function 16-bit counter overflow and must be cleared to 0 by application program.

Bit 2 Unimplemented, read as "0"

Bit 1~0 **TK16S1~TK16S0**: Touch key function 16-bit counter clock source selection
00: f_{SYS}
01: $f_{SYS}/2$
10: $f_{SYS}/4$
11: $f_{SYS}/8$

- **TKC1 Register**

Bit	7	6	5	4	3	2	1	0
Name	—	—	—	—	—	—	TKFS1	TKFS0
R/W	—	—	—	—	—	—	R/W	R/W
POR	—	—	—	—	—	—	1	1

Bit 7~2 Unimplemented, read as "0"

Bit 1~0 **TKFS1~TKFS0**: Touch key oscillator and Reference oscillator frequency selection
00: 1MHz
01: 3MHz
10: 7MHz
11: 11MHz

- **TK16DL Register**

Bit	7	6	5	4	3	2	1	0
Name	D7	D6	D5	D4	D3	D2	D1	D0
R/W	R	R	R	R	R	R	R	R
POR	0	0	0	0	0	0	0	0

Bit 7~0 **D7~D0**: Touch key function 16-bit counter low byte contents

- **TK16DH Register**

Bit	7	6	5	4	3	2	1	0
Name	D15	D14	D13	D12	D11	D10	D9	D8
R/W	R	R	R	R	R	R	R	R
POR	0	0	0	0	0	0	0	0

Bit 7~0 **D15~D8**: Touch key function 16-bit counter high byte contents

This register pair is used to store the touch key function 16-bit counter value. This 16-bit counter can be used to calibrate the reference or key oscillator frequency. When the touch key time slot counter overflows, this 16-bit counter will be stopped and the counter content will be unchanged. This register pair will be cleared to zero when the TKST bit is cleared.

- **TKM016DL Register**

Bit	7	6	5	4	3	2	1	0
Name	D7	D6	D5	D4	D3	D2	D1	D0
R/W	R	R	R	R	R	R	R	R
POR	0	0	0	0	0	0	0	0

Bit 7~0 **D7~D0**: Touch key module 16-bit C/F counter low byte contents

- **TKM016DH Register**

Bit	7	6	5	4	3	2	1	0
Name	D15	D14	D13	D12	D11	D10	D9	D8
R/W	R	R	R	R	R	R	R	R
POR	0	0	0	0	0	0	0	0

Bit 7~0 **D15~D8**: Touch key module 16-bit C/F counter high byte contents

This register pair is used to store the touch key module 16-bit C/F counter value. This 16-bit C/F counter will be stopped and the counter content will be kept unchanged when the touch key time slot counter overflows. This register pair will be cleared to zero when the TKST bit is set low.

- **TKM0ROL Register**

Bit	7	6	5	4	3	2	1	0
Name	D7	D6	D5	D4	D3	D2	D1	D0
R/W	R/W	R/W	R/W	R/W	R/W	R/W	R/W	R/W
POR	0	0	0	0	0	0	0	0

Bit 7~0 **D7~D0**: Touch key module reference oscillator internal capacitor selection

- **TKM0ROH Register**

Bit	7	6	5	4	3	2	1	0
Name	—	—	—	—	—	—	D9	D8
R/W	—	—	—	—	—	—	R/W	R/W
POR	—	—	—	—	—	—	0	0

Bit 7~2 Unimplemented, read as "0"

Bit 1~0 **D9~D8**: Touch key module reference oscillator internal capacitor selection

This register pair is used to store the touch key module reference oscillator capacitor value.

The reference oscillator internal capacitor value = (TKMRO[9:0] × 50pF) / 1024

- **TKM0C0 Register**

Bit	7	6	5	4	3	2	1	0
Name	MMXS1	MMXS0	MDFEN	MFILEN	MSOFC	MSOF2	MSOF1	MSOF0
R/W	R/W	R/W	R/W	R/W	R/W	R/W	R/W	R/W
POR	0	0	0	0	0	0	0	0

Bit 7~6 **MMXS1~ MMXS0**: Touch key module multiplexer key selection
00: KEY1
01: KEY2
10: KEY3
11: KEY4

Bit 5 **MDFEN**: Touch key module double-frequency control
0: Disable
1: Enable

This bit is used to control the touch key oscillator frequency doubling function. When this bit is set to 1, the key oscillator frequency will be doubled.

Bit 4 **MFILEN**: Touch key module filter function control
0: Disable
1: Enable

Bit 3 **MSOFC**: Touch key module C-to-F oscillator frequency hopping function control selection
0: Controlled by the MSOF2~MSOF0
1: Controlled by hardware circuit

This bit is used to select the touch key oscillator frequency hopping function control method. When this bit is set to 1, the key oscillator frequency hopping function is controlled by the hardware circuit regardless of the MSOF2~MSOF0 bits value.

Bit 2~0 **MSOF2~MSOF0**: Touch key module Reference and Key oscillators hopping frequency selection
000: 1.020MHz
001: 1.040MHz
010: 1.059MHz
011: 1.074MHz
100: 1.085MHz
101: 1.099MHz
110: 1.111MHz
111: 1.125MHz

These bits are used to select the touch key oscillator frequency for the hopping function. Note that these bits are only available when the MSOFC bit is cleared to 0.

The frequency mentioned here will be changed when the external or internal capacitor is with different values. If the touch key operates at 1MHz frequency, users can adjust the frequency in scale when any other frequency is selected.

- **TKM0C1 Register**

Bit	7	6	5	4	3	2	1	0
Name	MTSS	—	MROEN	MKOEN	MK4EN	MK3EN	MK2EN	MK1EN
R/W	R/W	—	R/W	R/W	R/W	R/W	R/W	R/W
POR	0	—	0	0	0	0	0	0

Bit 7 **MTSS**: Touch key module time slot counter clock source selection
0: Touch key module reference oscillator
1: $f_{SYS}/4$

Bit 6 Unimplemented, read as "0"

Bit 5 **MROEN**: Touch key module Reference oscillator enable control
0: Disable
1: Enable

This bit is used to enable the touch key module reference oscillator.

The reference oscillator should first be enabled before setting the TKST bit from low to high if the reference oscillator is selected to be used.

Bit 4 **MKOEN**: Touch key module Key oscillator enable control
0: Disable
1: Enable

This bit is used to enable the touch key module key oscillator.

The key oscillator should first be enabled before setting the TKST bit from low to high if the relevant key is enabled to be scanned.

Bit 3 **MK4EN**: Touch key module KEY4 enable control
0: Disable
1: Enable

Bit 2 **MK3EN**: Touch key module KEY3 enable control
0: Disable
1: Enable

Bit 1 **MK2EN**: Touch key module KEY2 enable control
0: Disable
1: Enable

Bit 0 **MK1EN**: Touch key module KEY1 enable control
0: Disable
1: Enable

Touch Key Operation

When a finger touches or is in proximity to a touch pad, the capacitance of the pad will increase. By using this capacitance variation to change slightly the frequency of the internal sense oscillator, touch actions can be sensed by measuring these frequency changes. Using an internal programmable divider the reference clock is used to generate a fixed time period. By counting the number of generated clock cycles from the sense oscillator during this fixed time period touch key actions can be determined.

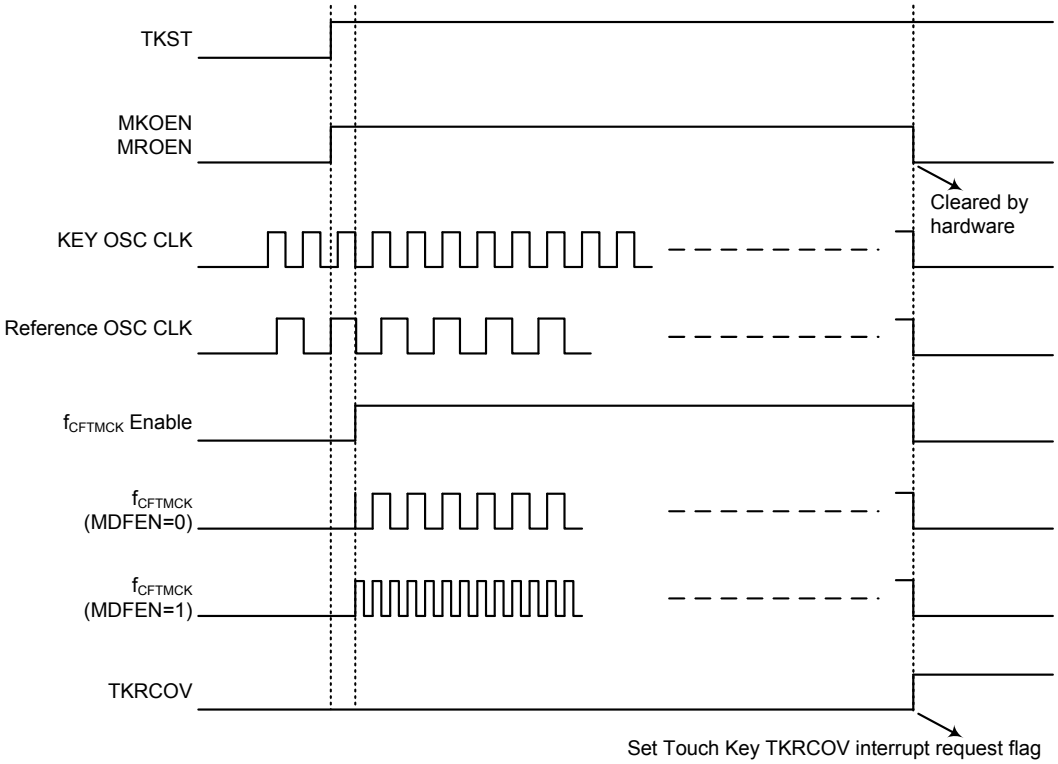

Touch Key Module Timing Diagram

The touch key module contains four touch key inputs, namely KEY1~KEY4, which are shared with logical I/O pins, and the desired function is selected using register bits. The touch key has its own independent sense oscillator. There are therefore four sense oscillators within the touch key module.

During this reference clock fixed interval, the number of clock cycles generated by the sense oscillator is measured, and it is this value that is used to determine if a touch action has been made or not. At the end of the fixed reference clock time interval a Touch Key interrupt signal will be generated.

The touch key module 16-bit C/F counter, 16-bit counter, 5-bit time slot unit period counter in the module will be automatically cleared when the TKST bit is cleared to zero, but the 8-bit programmable time slot counter will not be cleared. The overflow time is setup by user. When the TKST bit changes from low to high, the 16-bit C/F counter, 16-bit counter, 5-bit time slot unit period counter and 8-bit time slot timer counter will be automatically switched on.

The key oscillator and reference oscillator in the module will be automatically stopped and the 16-bit C/F counter, 16-bit counter, 5-bit time slot unit period counter and 8-bit time slot timer counter will be automatically switched off when the time slot counter overflows. The clock source for the time slot counter is sourced from the reference oscillator or $f_{SYS}/4$ which is selected using the MTSS bit in the TKM0C1 register. The reference oscillator and key oscillator will be enabled by setting the MROEN bit and MKOEN bits in the TKM0C1 register.

When the time slot counter in the touch key module overflows, an actual touch key interrupt will take place. The touch keys mentioned here are the keys which are enabled.

Touch Key Scan Operation Flowchart

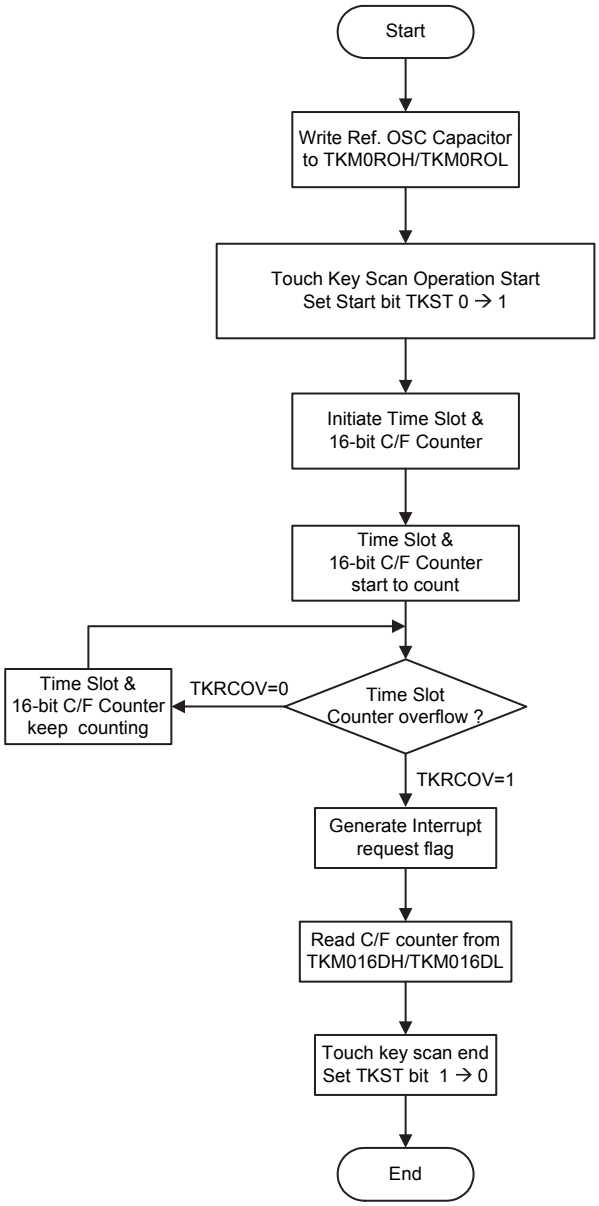

Touch Key Scan Operation Flowchart

Touch Key Interrupt

The touch key only has single interrupt, when the touch key module time slot counter overflows, an actual touch key interrupt will take place. The touch keys mentioned here are the keys which are enabled. The 16-bit C/F counter, 16-bit counter, 5-bit time slot unit period counter and 8-bit time slot counter in the module will be automatically cleared.

The TKCFOV flag which is the 16-bit C/F counter overflow flag will go high when the Touch Key Module 16-bit C/F counter overflows. As this flag will not be automatically cleared, it has to be cleared by the application program.

The TK16OV flag which is the 16-bit counter overflow flag will go high when the 16-bit counter overflows. As this flag will not be automatically cleared, it has to be cleared by the application program. More details regarding the touch key interrupts are located in the interrupt section of the datasheet.

Progrsmming Considerations

After the relevant registers are setup, the touch key detection process is initiated by changing the TKST Bit from low to high. This will enable and synchronise all relevant oscillators. The TKRCOV flag which is the time slot counter flag will go high when the counter overflows. When this happens an interrupt signal will be generated.

When the external touch key size and layout are defined, their related capacitances will then determine the sensor oscillator frequency.

Interrupts

Interrupts are an important part of any microcontroller system. When an external event or an internal function such as a Timer Module requires microcontroller attention, their corresponding interrupt will enforce a temporary suspension of the main program allowing the microcontroller to direct attention to their respective needs. The device contains several external interrupt and internal interrupt functions. The external interrupt is generated by the action of the external INT0 and INT1 pins, while the internal interrupts are generated by various internal functions such as the Timer Modules (TMs), Over Current/Voltage Protection function(OCVP), Time Base, LVD, EEPROM Touch Key function and the A/D Converter.

Interrupt Registers

Overall interrupt control, which basically means the setting of request flags when certain microcontroller conditions occur and the setting of interrupt enable bits by the application program, is controlled by a series of registers, located in the Special Purpose Data Memory, as shown in the accompanying table. The interrupt registers fall into three categories. The first is the INTC0~INTC2 registers which setup the primary interrupts, the second is the MFI0~MFI3 registers which setup the Multi-function interrupts. Finally there is an INTEG register to setup the external interrupt trigger edge type.

Each register contains a number of enable bits to enable or disable individual registers as well as interrupt flags to indicate the presence of an interrupt request. The naming convention of these follows a specific pattern. First is listed an abbreviated interrupt type, then the (optional) number of that interrupt followed by either an "E" for enable/disable bit or "F" for request flag.

Function	Enable Bit	Request Flag	Notes
Global	EMI	—	—
OCVP	OCVPE	OCVPF	—
INTn Pin	INTnE	INTnF	n=0~1
Multi-function	MFnE	MFnF	n=0~3
Time Base	TBnE	TBnF	n=0~1
LVD	LVE	LVF	—
EEPROM	DEE	DEF	—
Touch Key Module	TKME	TKMF	—
A/D Converter	ADE	ADF	
Timer Module	CTMnAE	CTMnAF	n=0~2
	CTMnPE	CTMnPF	
	STMAE	STMAF	—
	STMPE	STMPF	
	PTMAE	PTMAF	—
	PTMPE	PTMPF	

Interrupt Register Bit Naming Conventions

Register Name	Bit							
	7	6	5	4	3	2	1	0
INTEG	—	—	—	—	INT1S1	INT1S0	INT0S1	INT0S0
INTC0	—	MF0F	INT0F	OCVPF	MF0E	INT0E	OCVPE	EMI
INTC1	TB0F	MF3F	MF2F	MF1F	TB0E	MF3E	MF2E	MF1E
INTC2	ADF	TKMF	INT1F	TB1F	ADE	TKME	INT1E	TB1E
MFI0	CTM1AF	CTM1PF	CTM0AF	CTM0PF	CTM1AE	CTM1PE	CTM0AE	CTM0PE
MFI1	CTM2AF	CTM2PF	STMAF	STMPF	CTM2AE	CTM2PE	STMAE	STMPE
MFI2	—	—	PTMAF	PTMPF	—	—	PTMAE	PTMPE
MFI3	—	—	DEF	LVF	—	—	DEE	LVE

Interrupt Register List

- **INTEG Register**

Bit	7	6	5	4	3	2	1	0
Name	—	—	—	—	INT1S1	INT1S0	INT0S1	INT0S0
R/W	—	—	—	—	R/W	R/W	R/W	R/W
POR	—	—	—	—	0	0	0	0

Bit 7 ~ 4 Unimplemented, read as "0"

Bit 3 ~ 2 **INT1S1~INT1S0**: Defines INT1 interrupt active edge
00: Disabled
01: Rising Edge
10: Falling Edge
11: Dual Edges

Bit 1 ~ 0 **INT0S1~INT0S0**: Defines INT0 interrupt active edge
00: Disabled
01: Rising Edge
10: Falling Edge
11: Dual Edges

- **INTC0 Register**

Bit	7	6	5	4	3	2	1	0
Name	—	MF0F	INT0F	OCVPF	MF0E	INT0E	OCVPE	EMI
R/W	—	R/W	R/W	R/W	R/W	R/W	R/W	R/W
POR	—	0	0	0	0	0	0	0

Bit 7 Unimplemented, read as "0"

Bit 6 **MF0F**: Multi-function interrupt 0 request flag
0: No request
1: Interrupt request

Bit 5 **INT0F**: INT0 interrupt request flag
0: No request
1: Interrupt request

Bit 4 **OCVPF**: Over current/voltage protection interrupt request flag
0: No request
1: Interrupt request

Bit 3 **MF0E**: Multi-function interrupt 0 control
0: Disable
1: Enable

Bit 2 **INT0E**: INT0 interrupt control
0: Disable
1: Enable

Bit 1 **OCVPE**: Over current/voltage protection interrupt control
0: Disable
1: Enable

Bit 0 **EMI**: Global Interrupt Control
0: Disable
1: Enable

- **INTC1 Register**

Bit	7	6	5	4	3	2	1	0
Name	TB0F	MF3F	MF2F	MF1F	TB0E	MF3E	MF2E	MF1E
R/W	R/W	R/W	R/W	R/W	R/W	R/W	R/W	R/W
POR	0	0	0	0	0	0	0	0

Bit 7 **TB0F**: Time Base 0 interrupt request flag
0: No request
1: Interrupt request

Bit 6 **MF3F**: Multi-function interrupt 3 request flag
0: No request
1: Interrupt request

Bit 5 **MF2F**: Multi-function interrupt 2 request flag
0: No request
1: Interrupt request

Bit 4 **MF1F**: Multi-function interrupt 1 request flag
0: No request
1: Interrupt request

Bit 3 **TB0E**: Time Base 0 interrupt control
0: Disable
1: Enable

Bit 2 **MF3E**: Multi-function interrupt 3 control
0: Disable
1: Enable

Bit 1 **MF2E**: Multi-function interrupt 2 control
0: Disable
1: Enable

Bit 0 **MF1E**: Multi-function interrupt 1 control
0: Disable
1: Enable

- **INTC2 Register**

Bit	7	6	5	4	3	2	1	0
Name	ADF	TKMF	INT1F	TB1F	ADE	TKME	INT1E	TB1E
R/W	R/W	R/W	R/W	R/W	R/W	R/W	R/W	R/W
POR	0	0	0	0	0	0	0	0

Bit 7 **ADF**: A/D converter interrupt request flag
0: No request
1: Interrupt request

Bit 6 **TKMF**: Touch key module interrupt request flag
0: No request
1: Interrupt request

Bit 5 **INT1F**: INT1 interrupt request flag
0: No request
1: Interrupt request

Bit 4 **TB1F**: Time Base 1 interrupt request flag
0: No request
1: Interrupt request

Bit 3 **ADE**: A/D converter interrupt control
0: Disable
1: Enable

Bit 2 **TKME**: Touch key module interrupt control
0: Disable
1: Enable

Bit 1 **INT1E**: INT1 interrupt control
0: Disable
1: Enable

Bit 0 **TB1E**: Time Base 1 interrupt control
0: Disable
1: Enable

- **MFI0 Register**

Bit	7	6	5	4	3	2	1	0
Name	CTM1AF	CTM1PF	CTM0AF	CTM0PF	CTM1AE	CTM1PE	CTM0AE	CTM0PE
R/W	R/W	R/W	R/W	R/W	R/W	R/W	R/W	R/W
POR	0	0	0	0	0	0	0	0

Bit 7 **CTM1AF**: CTM1 comparator A match interrupt request flag
0: No request
1: Interrupt request

Bit 6 **CTM1PF**: CTM1 comparator P match interrupt request flag
0: No request
1: Interrupt request

Bit 5 **CTM0AF**: CTM0 comparator A match interrupt request flag
0: No request
1: Interrupt request

Bit 4 **CTM0PF**: CTM0 comparator P match interrupt request flag
0: No request
1: Interrupt request

Bit 3 **CTM1AE**: CTM1 comparator A match interrupt control
0: Disable
1: Enable

Bit 2 **CTM1PE**: CTM1 comparator P match interrupt control
0: Disable
1: Enable

Bit 1 **CTM0AE**: CTM0 comparator A match interrupt control
0: Disable
1: Enable

Bit 0 **CTM0PE**: CTM0 comparator P match interrupt control
0: Disable
1: Enable

- **MFI1 Register**

Bit	7	6	5	4	3	2	1	0
Name	CTM2AF	CTM2PF	STMAF	STMPF	CTM2AE	CTM2PE	STMAE	STMPE
R/W	R/W	R/W	R/W	R/W	R/W	R/W	R/W	R/W
POR	0	0	0	0	0	0	0	0

Bit 7 **CTM2AF**: CTM2 comparator A match interrupt request flag
0: No request
1: Interrupt request

Bit 6 **CTM2PF**: CTM2 comparator P match interrupt request flag
0: No request
1: Interrupt request

Bit 5 **STMAF**: STM comparator A match interrupt request flag
0: No request
1: Interrupt request

Bit 4 **STMPF**: STM comparator P match interrupt request flag
0: No request
1: Interrupt request

Bit 3 **CTM2AE**: CTM2 comparator A match interrupt control
0: Disable
1: Enable

Bit 2 **CTM2PE**: CTM2 comparator P match interrupt control
0: Disable
1: Enable

Bit 1 **STMAE**: STM comparator A match interrupt control
0: Disable
1: Enable

Bit 0 **STMPE**: STM comparator P match interrupt control
0: Disable
1: Enable

- **MFI2 Register**

Bit	7	6	5	4	3	2	1	0
Name	—	—	PTMAF	PTMPF	—	—	PTMAE	PTMPE
R/W	—	—	R/W	R/W	—	—	R/W	R/W
POR	—	—	0	0	—	—	0	0

Bit 7~6 Unimplemented, read as "0"

Bit 5 **PTMAF**: PTM comparator A match interrupt request flag
0: No request
1: Interrupt request

Bit 4 **PTMPF**: PTM comparator P match interrupt request flag
0: No request
1: Interrupt request

Bit 3~2 Unimplemented, read as "0"

Bit 1 **PTMAE**: PTM comparator A match interrupt control
0: Disable
1: Enable

Bit 0 **PTMPE**: PTM comparator P match interrupt control
0: Disable
1: Enable

- **MFI3 Register**

Bit	7	6	5	4	3	2	1	0
Name	—	—	DEF	LVF	—	—	DEE	LVE
R/W	—	—	R/W	R/W	—	—	R/W	R/W
POR	—	—	0	0	—	—	0	0

Bit 7~6 Unimplemented, read as "0"

Bit 5 **DEF**: Data EEPROM interrupt request flag
0: No request
1: Interrupt request

Bit 4 **LVF**: LVD interrupt request flag
0: No request
1: Interrupt request

Bit 3~2 Unimplemented, read as "0"

Bit 1 **DEE**: Data EEPROM interrupt control
0: Disable
1: Enable

Bit 0 **LVE**: LVD interrupt control
0: Disable
1: Enable

Interrupt Operation

When the conditions for an interrupt event occur, such as a TM Comparator P or Comparator A match etc, the relevant interrupt request flag will be set. Whether the request flag actually generates a program jump to the relevant interrupt vector is determined by the condition of the interrupt enable bit. If the enable bit is set high then the program will jump to its relevant vector; if the enable bit is zero then although the interrupt request flag is set an actual interrupt will not be generated and the program will not jump to the relevant interrupt vector. The global interrupt enable bit, if cleared to zero, will disable all interrupts.

When an interrupt is generated, the Program Counter, which stores the address of the next instruction to be executed, will be transferred onto the stack. The Program Counter will then be loaded with a new address which will be the value of the corresponding interrupt vector. The microcontroller will then fetch its next instruction from this interrupt vector. The instruction at this vector will usually be a "JMP" which will jump to another section of program which is known as the interrupt service routine. Here is located the code to control the appropriate interrupt. The interrupt service routine must be terminated with a "RETI", which retrieves the original Program Counter address from the stack and allows the microcontroller to continue with normal execution at the point where the interrupt occurred.

The various interrupt enable bits, together with their associated request flags, are shown in the accompanying diagrams with their order of priority. Some interrupt sources have their own individual vector while others share the same multi-function interrupt vector. Once an interrupt subroutine is serviced, all the other interrupts will be blocked, as the global interrupt enable bit, EMI bit will be cleared automatically. This will prevent any further interrupt nesting from occurring. However, if other interrupt requests occur during this interval, although the interrupt will not be immediately serviced, the request flag will still be recorded.

If an interrupt requires immediate servicing while the program is already in another interrupt service routine, the EMI bit should be set after entering the routine, to allow interrupt nesting. If the stack is full, the interrupt request will not be acknowledged, even if the related interrupt is enabled, until the Stack Pointer is decremented. If immediate service is desired, the stack must be prevented from becoming full. In case of simultaneous requests, the accompanying diagram shows the priority that is applied. All of the interrupt request flags when set will wake-up the device if it is in SLEEP or IDLE Mode, however to prevent a wake-up from occurring the corresponding flag should be set before the device is in SLEEP or IDLE Mode.

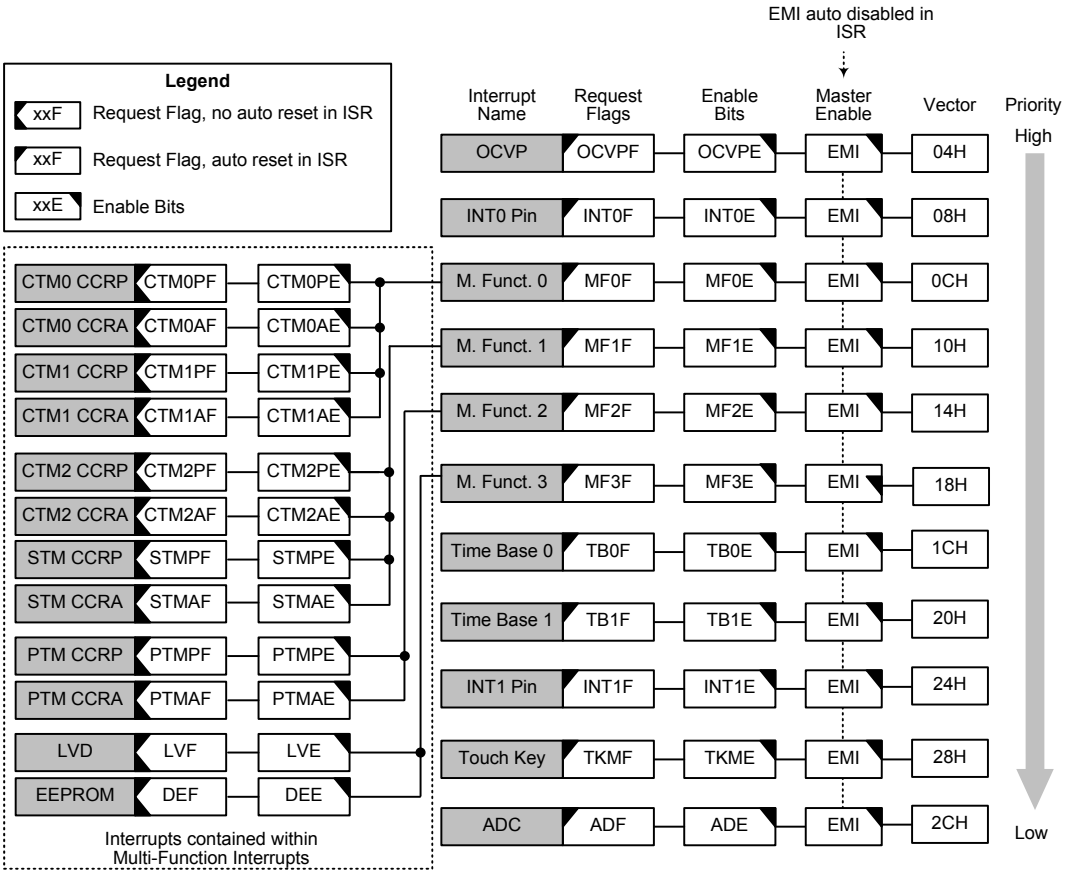

Interrupt Structure

External Interrupts

The external interrupts are controlled by signal transitions on the pins INT0~INT1. An external interrupt request will take place when the external interrupt request flags, INT0F~INT1F, are set, which will occur when a transition, whose type is chosen by the edge select bits, appears on the external interrupt pins. To allow the program to branch to its respective interrupt vector address, the global interrupt enable bit, EMI, and respective external interrupt enable bit, INT0E~INT1E, must first be set. Additionally the correct interrupt edge type must be selected using the INTEG register to enable the external interrupt function and to choose the trigger edge type. As the external interrupt pins are pin-shared with I/O pins, they can only be configured as external interrupt pins if their external interrupt enable bit in the corresponding interrupt register has been set. The pin must also be setup as an input by setting the corresponding bit in the port control register as well as the relevant pin-shared function selection bits. When the interrupt is enabled, the stack is not full and the correct transition type appears on the external interrupt pin, a subroutine call to the external interrupt vector, will take place. When the interrupt is serviced, the external interrupt request flags, INT0F~INT1F, will be automatically reset and the EMI bit will be automatically cleared to disable other interrupts. Note that any pull-high resistor selections on the external interrupt pins will remain valid even if the pin is used as an external interrupt input.

The INTEG register is used to select the type of active edge that will trigger the external interrupt. A choice of either rising or falling or both edge types can be chosen to trigger an external interrupt. Note that the INTEG register can also be used to disable the external interrupt function.

OCVP Interrupt

An OCVP interrupt request will take place when the OCVP Interrupt request flag, OCVPF, is set, which occurs when the OCVP circuit detects an over current or voltage condition. To allow the program to branch to its respective interrupt vector address, the global interrupt enable bit, EMI, and the OCVP Interrupt enable bit, OCVPE, must first be set. When the interrupt is enabled, the stack is not full and a user-defined current or voltage condition occurs, a subroutine call to the OCVP Interrupt vector, will take place. When the OCVP Interrupt is serviced, the EMI bit will be automatically cleared to disable other interrupts and the OCVP interrupt request flag will be also automatically cleared.

A/D Converter Interrupt

The A/D Converter Interrupt is controlled by the termination of an A/D conversion process. An A/D Converter Interrupt request will take place when the A/D Converter Interrupt request flag, ADF, is set, which occurs when the A/D conversion process finishes. To allow the program to branch to its respective interrupt vector address, the global interrupt enable bit, EMI, and A/D Interrupt enable bit, ADE, must first be set. When the interrupt is enabled, the stack is not full and the A/D conversion process has ended, a subroutine call to the A/D Converter Interrupt vector, will take place. When the interrupt is serviced, the A/D Converter Interrupt flag, ADF, will be automatically cleared. The EMI bit will also be automatically cleared to disable other interrupts.

Multi-function Interrupts

Within the device there are four Multi-function interrupts. Unlike the other independent interrupts, these interrupts have no independent source, but rather are formed from other existing interrupt sources, namely the TM Interrupts, LVD Interrupt, and EEPROM Interrupt.

A Multi-function interrupt request will take place when any of the Multi-function interrupt request flags, MFnF are set. The Multi-function interrupt flags will be set when any of their included functions generate an interrupt request flag. To allow the program to branch to its respective interrupt vector address, when the Multi-function interrupt is enabled and the stack is not full, and either one of the interrupts contained within each of Multi-function interrupt occurs, a subroutine call to one of the Multi-function interrupt vectors will take place. When the interrupt is serviced, the related Multi-Function request flag, will be automatically reset and the EMI bit will be automatically cleared to disable other interrupts.

However, it must be noted that, although the Multi-function Interrupt flags will be automatically reset when the interrupt is serviced, the request flags from the original source of the Multi-function interrupts, namely the TM Interrupts, LVD Interrupt and EEPROM Interrupt will not be automatically reset and must be manually reset by the application program.

Time Base Interrupts

The function of the Time Base interrupts is to provide regular time signal in the form of an internal interrupt. They are controlled by the overflow signals from their respective timer functions. When these happens their respective interrupt request flags, TB0F or TB1F will be set. To allow the program to branch to their respective interrupt vector addresses, the global interrupt enable bit, EMI and Time Base enable bits, TB0E or TB1E, must first be set. When the interrupt is enabled, the stack is not full and the Time Base overflows, a subroutine call to their respective vector locations will take place. When the interrupt is serviced, the respective interrupt request flag, TB0F or TB1F, will be automatically reset and the EMI bit will be cleared to disable other interrupts.

The purpose of the Time Base Interrupt is to provide an interrupt signal at fixed time periods. Their clock sources originate from the internal clock source f_{TB}. This f_{TB} input clock passes through a divider, the division ratio of which is selected by programming the appropriate bits in the TBC register to obtain longer interrupt periods whose value ranges. The clock source that generates f_{TB}, which in turn controls the Time Base interrupt period, can originate from several different sources which is selected using the TBCK bit in the TBC register.

- **TBC Register**

Bit	7	6	5	4	3	2	1	0
Name	TBON	TBCK	TB11	TB10	—	TB02	TB01	TB00
R/W	R/W	R/W	R/W	R/W	—	R/W	R/W	R/W
POR	0	0	1	1	—	1	1	1

Bit 7 **TBON**: TB0 and TB1 Control bit
0: Disable
1: Enable

Bit 6 **TBCK**: Select f_{TB} Clock Source
0: f_{TBC}
1: $f_{SYS}/4$

Bit 5 ~ 4 **TB11 ~ TB10**: Select Time Base 1 Time-out Period
00: $2^{12}/f_{TB}$
01: $2^{13}/f_{TB}$
10: $2^{14}/f_{TB}$
11: $2^{15}/f_{TB}$

Bit 3 Unimplemented, read as "0"

Bit 2 ~ 0 **TB02 ~ TB00**: Select Time Base 0 Time-out Period
000: $2^8/f_{TB}$
001: $2^9/f_{TB}$
010: $2^{10}/f_{TB}$
011: $2^{11}/f_{TB}$
100: $2^{12}/f_{TB}$
101: $2^{13}/f_{TB}$
110: $2^{14}/f_{TB}$
111: $2^{15}/f_{TB}$

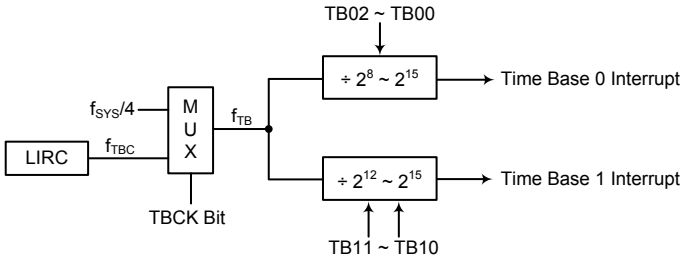

Time Base Interrupt

EEPROM Interrupt

The EEPROM interrupt is contained within the Multi-function Interrupt. An EEPROM Interrupt request will take place when the EEPROM Interrupt request flag, DEF, is set, which occurs when an EEPROM Write cycle ends. To allow the program to branch to its respective interrupt vector address, the global interrupt enable bit, EMI, and EEPROM Interrupt enable bit, DEE, and associated Multi-function interrupt enable bit, MF3E, must first be set. When the interrupt is enabled, the stack is not full and an EEPROM Write cycle ends, a subroutine call to the respective EEPROM Interrupt vector, will take place. When the EEPROM Interrupt is serviced, the EMI bit will be automatically cleared to disable other interrupts, however only the Multi-function interrupt request flag will be also automatically cleared. As the DEF flag will not be automatically cleared, it has to be cleared by the application program.

LVD Interrupt

The LVD interrupt is contained within the Multi-function Interrupt. An LVD Interrupt request will take place when the LVD Interrupt request flag, LVF, is set, which occurs when the Low Voltage Detector function detects a low power supply voltage. To allow the program to branch to its respective interrupt vector address, the global interrupt enable bit, EMI, and Low Voltage Interrupt enable bit, LVE, and associated Multi-function interrupt enable bit, MF3E, must first be set. When the interrupt is enabled, the stack is not full and a low voltage condition occurs, a subroutine call to the LVD Interrupt vector, will take place. When the Low Voltage Interrupt is serviced, the EMI bit will be automatically cleared to disable other interrupts, however only the Multi-function interrupt request flag will be also automatically cleared. As the LVD interrupt request flag, LVF, will not be automatically cleared, it has to be cleared by the application program.

Touch Key Module Interrupt

A Touch Key Module Interrupt request will take place when the Touch Key Module Interrupt request flag, TKMF, is set, which occurs when the touch key time slot counter overflows. To allow the program to branch to its respective interrupt vector address, the global interrupt enable bit, EMI, and the Touch Key Module Interrupt enable bit, TKME, must first be set. When the interrupt is enabled, the stack is not full and the touch key time slot counter overflows, a subroutine call to the respective Interrupt vector, will take place. When the interrupt is serviced, the Touch Key Module Interrupt flag, TKMF, will be automatically cleared. The EMI bit will also be automatically cleared to disable other interrupts.

TM Interrupts

The Compact, Standard and Periodic Type TMs each have two interrupts. All of the TM interrupts are contained within the Multi-function Interrupts. For the different Type TMs there are two interrupt request flags xTMnPF and xTMnAF and two enable bits xTMnPE and xTMnAE. A TM interrupt request will take place when any of the TM request flags are set, a situation which occurs when a TM comparator P or comparator A match situation happens.

To allow the program to branch to its respective interrupt vector address, the global interrupt enable bit, EMI, and the respective TM Interrupt enable bit, and associated Multi-function interrupt enable bit, MFnF, must first be set. When the interrupt is enabled, the stack is not full and a TM comparator match situation occurs, a subroutine call to the relevant TM Interrupt vector locations, will take place. When the TM interrupt is serviced, the EMI bit will be automatically cleared to disable other interrupts, however only the related MFnF flag will be automatically cleared. As the TM interrupt request flags will not be automatically cleared, they have to be cleared by the application program.

Interrupt Wake-up Function

Each of the interrupt functions has the capability of waking up the microcontroller when in the SLEEP or IDLE Mode. A wake-up is generated when an interrupt request flag changes from low to high and is independent of whether the interrupt is enabled or not. Therefore, even though the device is in the SLEEP or IDLE Mode and its system oscillator stopped, situations such as external edge transitions on the external interrupt pins or a low power supply voltage may cause their respective interrupt flag to be set high and consequently generate an interrupt. Care must therefore be taken if spurious wake-up situations are to be avoided. If an interrupt wake-up function is to be disabled then the corresponding interrupt request flag should be set high before the device enters the SLEEP or IDLE Mode. The interrupt enable bits have no effect on the interrupt wake-up function.

Programming Considerations

By disabling the relevant interrupt enable bits, a requested interrupt can be prevented from being serviced, however, once an interrupt request flag is set, it will remain in this condition in the interrupt register until the corresponding interrupt is serviced or until the request flag is cleared by the application program.

Where a certain interrupt is contained within a Multi-function interrupt, then when the interrupt service routine is executed, as only the Multi-function interrupt request flags, MF0F~MF3F, will be automatically cleared, the individual request flag for the function needs to be cleared by the application program.

It is recommended that programs do not use the "CALL" instruction within the interrupt service subroutine. Interrupts often occur in an unpredictable manner or need to be serviced immediately. If only one stack is left and the interrupt is not well controlled, the original control sequence will be damaged once a CALL subroutine is executed in the interrupt subroutine.

Every interrupt has the capability of waking up the microcontroller when it is in SLEEP or IDLE Mode, the wake up being generated when the interrupt request flag changes from low to high. If it is required to prevent a certain interrupt from waking up the microcontroller then its respective request flag should be first set high before enter SLEEP or IDLE Mode.

As only the Program Counter is pushed onto the stack, then when the interrupt is serviced, if the contents of the accumulator, status register or other registers are altered by the interrupt service program, their contents should be saved to the memory at the beginning of the interrupt service routine.

To return from an interrupt subroutine, either a RET or RETI instruction may be executed. The RETI instruction in addition to executing a return to the main program also automatically sets the EMI bit high to allow further interrupts. The RET instruction however only executes a return to the main program leaving the EMI bit in its present zero state and therefore disabling the execution of further interrupts.

Low Voltage Detector – LVD

The device has a Low Voltage Detector function, also known as LVD. This enables the device to monitor the power supply voltage, V_{DD}, and provides a warning signal should it fall below a certain level. This function may be especially useful in battery applications where the supply voltage will gradually reduce as the battery ages, as it allows an early warning battery low signal to be generated. The Low Voltage Detector also has the capability of generating an interrupt signal.

LVD Register

The Low Voltage Detector function is controlled using a single register with the name LVDC. Three bits in this register, VLVD2~VLVD0, are used to select one of eight fixed voltages below which a low voltage condition will be determined. A low voltage condition is indicated when the LVDO bit is set. If the LVDO bit is low, this indicates that the V_{DD} voltage is above the preset low voltage value. The LVDEN bit is used to control the overall on/off function of the low voltage detector. Setting the bit high will enable the low voltage detector. Clearing the bit to zero will switch off the internal low voltage detector circuits. As the low voltage detector will consume a certain amount of power, it may be desirable to switch off the circuit when not in use, an important consideration in power sensitive battery powered applications.

- **LVDC Register**

Bit	7	6	5	4	3	2	1	0
Name	—	—	LVDO	LVDEN	—	VLVD2	VLVD1	VLVD0
R/W	—	—	R	R/W	—	R/W	R/W	R/W
POR	—	—	0	0	—	0	0	0

Bit 7 ~ 6 Unimplemented, read as "0"

Bit 5 **LVDO**: LVD Output Flag
0: No Low Voltage Detected
1: Low Voltage Detected

Bit 4 **LVDEN**: Low Voltage Detector Control
0: Disable
1: Enable

Bit 3 Unimplemented, read as "0"

Bit 2~0 **VLVD2 ~ VLVD0**: Select LVD Voltage
000: 2.0V
001: 2.2V
010: 2.4V
011: 2.7V
100: 3.0V
101: 3.3V
110: 3.6V
111: 4.0V

LVD Operation

The Low Voltage Detector function operates by comparing the power supply voltage, V_{DD}, with a pre-specified voltage level stored in the LVDC register. This has a range of between 2.0V and 4.0V. When the power supply voltage, V_{DD}, falls below this pre-determined value, the LVDO bit will be set high indicating a low power supply voltage condition. The Low Voltage Detector function is supplied by a reference voltage which will be automatically enabled. After enabling the Low Voltage Detector, a time delay t_{LVDS} should be allowed for the circuitry to stabilise before reading the LVDO bit. Note also that as the V_{DD} voltage may rise and fall rather slowly, at the voltage nears that of V_{LVD}, there may be multiple bit LVDO transitions.

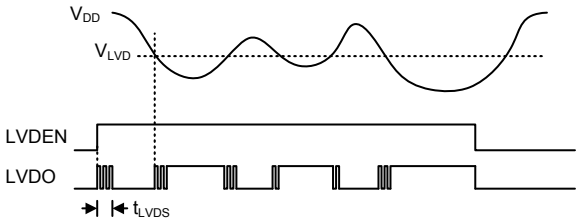

LVD Operation

The Low Voltage Detector also has an interrupt which is contained within one of the multi-function interrupts, providing an alternative means of low voltage detection, in addition to polling the LVDO bit. The interrupt will only be generated after a delay of t_{LVD} after the LVDO bit has been set high by a low voltage condition. In this case, the LVF interrupt request flag will be set, causing an interrupt to be generated if V_{DD} falls below the preset LVD voltage. This will cause the device to wake-up from the SLEEP or IDLE Mode, however if the Low Voltage Detector wake up function is not required then the LVF flag should be first set high before the device enters the SLEEP or IDLE Mode.

Configuration Option

Configuration options refer to certain options within the MCU that are programmed into the device during the programming process. During the development process, these options are selected using the HT-IDE software development tools. As these options are programmed into the device using the hardware programming tools, once they are selected they cannot be changed later using the application program. All options must be defined for proper system function, the details of which are shown in the table.

No.	Options
Oscillator Option	
1	HIRC frequency Selection: 4MHz 8MHz 12MHz

Application Circuits

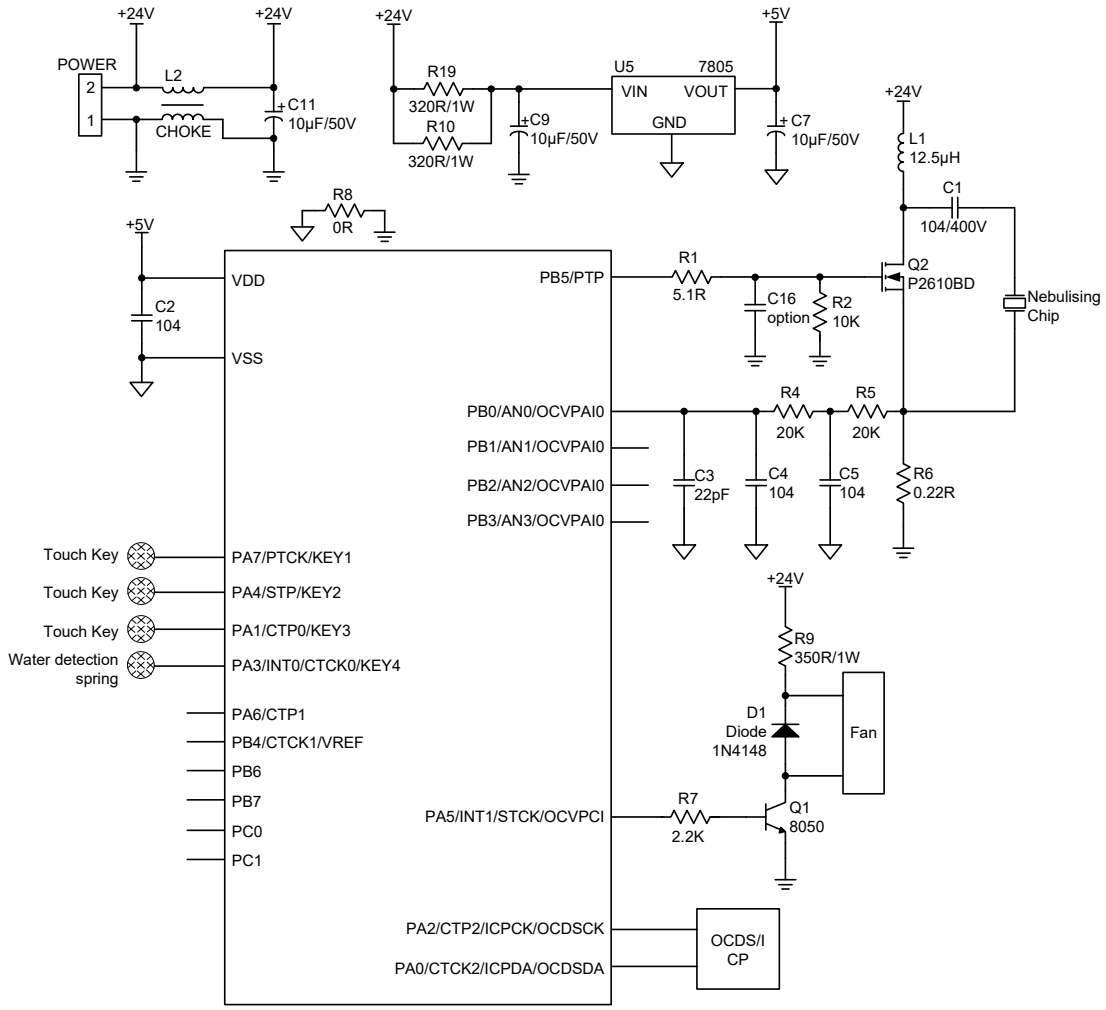

Instruction Set

Introduction

Central to the successful operation of any microcontroller is its instruction set, which is a set of program instruction codes that directs the microcontroller to perform certain operations. In the case of Holtek microcontroller, a comprehensive and flexible set of over 60 instructions is provided to enable programmers to implement their application with the minimum of programming overheads.

For easier understanding of the various instruction codes, they have been subdivided into several functional groupings.

Instruction Timing

Most instructions are implemented within one instruction cycle. The exceptions to this are branch, call, or table read instructions where two instruction cycles are required. One instruction cycle is equal to 4 system clock cycles, therefore in the case of an 8MHz system oscillator, most instructions would be implemented within 0.5μs and branch or call instructions would be implemented within 1μs. Although instructions which require one more cycle to implement are generally limited to the JMP, CALL, RET, RETI and table read instructions, it is important to realize that any other instructions which involve manipulation of the Program Counter Low register or PCL will also take one more cycle to implement. As instructions which change the contents of the PCL will imply a direct jump to that new address, one more cycle will be required. Examples of such instructions would be "CLR PCL" or "MOV PCL, A". For the case of skip instructions, it must be noted that if the result of the comparison involves a skip operation then this will also take one more cycle, if no skip is involved then only one cycle is required.

Moving and Transferring Data

The transfer of data within the microcontroller program is one of the most frequently used operations. Making use of three kinds of MOV instructions, data can be transferred from registers to the Accumulator and vice-versa as well as being able to move specific immediate data directly into the Accumulator. One of the most important data transfer applications is to receive data from the input ports and transfer data to the output ports.

Arithmetic Operations

The ability to perform certain arithmetic operations and data manipulation is a necessary feature of most microcontroller applications. Within the Holtek microcontroller instruction set are a range of add and subtract instruction mnemonics to enable the necessary arithmetic to be carried out. Care must be taken to ensure correct handling of carry and borrow data when results exceed 255 for addition and less than 0 for subtraction. The increment and decrement instructions INC, INCA, DEC and DECA provide a simple means of increasing or decreasing by a value of one of the values in the destination specified.

Logical and Rotate Operation

The standard logical operations such as AND, OR, XOR and CPL all have their own instruction within the Holtek microcontroller instruction set. As with the case of most instructions involving data manipulation, data must pass through the Accumulator which may involve additional programming steps. In all logical data operations, the zero flag may be set if the result of the operation is zero. Another form of logical data manipulation comes from the rotate instructions such as RR, RL, RRC and RLC which provide a simple means of rotating one bit right or left. Different rotate instructions exist depending on program requirements. Rotate instructions are useful for serial port programming applications where data can be rotated from an internal register into the Carry bit from where it can be examined and the necessary serial bit set high or low. Another application which rotate data operations are used is to implement multiplication and division calculations.

Branches and Control Transfer

Program branching takes the form of either jumps to specified locations using the JMP instruction or to a subroutine using the CALL instruction. They differ in the sense that in the case of a subroutine call, the program must return to the instruction immediately when the subroutine has been carried out. This is done by placing a return instruction "RET" in the subroutine which will cause the program to jump back to the address right after the CALL instruction. In the case of a JMP instruction, the program simply jumps to the desired location. There is no requirement to jump back to the original jumping off point as in the case of the CALL instruction. One special and extremely useful set of branch instructions are the conditional branches. Here a decision is first made regarding the condition of a certain data memory or individual bits. Depending upon the conditions, the program will continue with the next instruction or skip over it and jump to the following instruction. These instructions are the key to decision making and branching within the program perhaps determined by the condition of certain input switches or by the condition of internal data bits.

Bit Operations

The ability to provide single bit operations on Data Memory is an extremely flexible feature of all Holtek microcontrollers. This feature is especially useful for output port bit programming where individual bits or port pins can be directly set high or low using either the "SET [m].i" or "CLR [m].i" instructions respectively. The feature removes the need for programmers to first read the 8-bit output port, manipulate the input data to ensure that other bits are not changed and then output the port with the correct new data. This read-modify-write process is taken care of automatically when these bit operation instructions are used.

Table Read Operations

Data storage is normally implemented by using registers. However, when working with large amounts of fixed data, the volume involved often makes it inconvenient to store the fixed data in the Data Memory. To overcome this problem, Holtek microcontrollers allow an area of Program Memory to be set as a table where data can be directly stored. A set of easy to use instructions provides the means by which this fixed data can be referenced and retrieved from the Program Memory.

Other Operations

In addition to the above functional instructions, a range of other instructions also exist such as the "HALT" instruction for Power-down operations and instructions to control the operation of the Watchdog Timer for reliable program operations under extreme electric or electromagnetic environments. For their relevant operations, refer to the functional related sections.

Instruction Set Summary

The following table depicts a summary of the instruction set categorised according to function and can be consulted as a basic instruction reference using the following listed conventions.

Table Conventions

x: Bits immediate data
m: Data Memory address
A: Accumulator
i: 0~7 number of bits
addr: Program memory address

Mnemonic	Description	Cycles	Flag Affected
Arithmetic			
ADD A,[m]	Add Data Memory to ACC	1	Z, C, AC, OV
ADDM A,[m]	Add ACC to Data Memory	1 Note	Z, C, AC, OV
ADD A,x	Add immediate data to ACC	1	Z, C, AC, OV
ADC A,[m]	Add Data Memory to ACC with Carry	1	Z, C, AC, OV
ADCM A,[m]	Add ACC to Data memory with Carry	1 Note	Z, C, AC, OV
SUB A,x	Subtract immediate data from the ACC	1	Z, C, AC, OV
SUB A,[m]	Subtract Data Memory from ACC	1	Z, C, AC, OV
SUBM A,[m]	Subtract Data Memory from ACC with result in Data Memory	1 Note	Z, C, AC, OV
SBC A,[m]	Subtract Data Memory from ACC with Carry	1	Z, C, AC, OV
SBCM A,[m]	Subtract Data Memory from ACC with Carry, result in Data Memory	1 Note	Z, C, AC, OV
DAA [m]	Decimal adjust ACC for Addition with result in Data Memory	1 Note	C
Logic Operation			
AND A,[m]	Logical AND Data Memory to ACC	1	Z
OR A,[m]	Logical OR Data Memory to ACC	1	Z
XOR A,[m]	Logical XOR Data Memory to ACC	1	Z
ANDM A,[m]	Logical AND ACC to Data Memory	1 Note	Z
ORM A,[m]	Logical OR ACC to Data Memory	1 Note	Z
XORM A,[m]	Logical XOR ACC to Data Memory	1 Note	Z
AND A,x	Logical AND immediate Data to ACC	1	Z
OR A,x	Logical OR immediate Data to ACC	1	Z
XOR A,x	Logical XOR immediate Data to ACC	1	Z
CPL [m]	Complement Data Memory	1 Note	Z
CPLA [m]	Complement Data Memory with result in ACC	1	Z
Increment & Decrement			
INCA [m]	Increment Data Memory with result in ACC	1	Z
INC [m]	Increment Data Memory	1 Note	Z
DECA [m]	Decrement Data Memory with result in ACC	1	Z
DEC [m]	Decrement Data Memory	1 Note	Z
Rotate			
RRA [m]	Rotate Data Memory right with result in ACC	1	None
RR [m]	Rotate Data Memory right	1 Note	None
RRCA [m]	Rotate Data Memory right through Carry with result in ACC	1	C
RRC [m]	Rotate Data Memory right through Carry	1 Note	C
RLA [m]	Rotate Data Memory left with result in ACC	1	None
RL [m]	Rotate Data Memory left	1 Note	None
RLCA [m]	Rotate Data Memory left through Carry with result in ACC	1	C
RLC [m]	Rotate Data Memory left through Carry	1 Note	C

Mnemonic	Description	Cycles	Flag Affected
Data Move			
MOV A,[m]	Move Data Memory to ACC	1	None
MOV [m],A	Move ACC to Data Memory	1[Note]	None
MOV A,x	Move immediate data to ACC	1	None
Bit Operation			
CLR [m].i	Clear bit of Data Memory	1[Note]	None
SET [m].i	Set bit of Data Memory	1[Note]	None
Branch Operation			
JMP addr	Jump unconditionally	2	None
SZ [m]	Skip if Data Memory is zero	1[Note]	None
SZA [m]	Skip if Data Memory is zero with data movement to ACC	1[Note]	None
SZ [m].i	Skip if bit i of Data Memory is zero	1[Note]	None
SNZ [m].i	Skip if bit i of Data Memory is not zero	1[Note]	None
SIZ [m]	Skip if increment Data Memory is zero	1[Note]	None
SDZ [m]	Skip if decrement Data Memory is zero	1[Note]	None
SIZA [m]	Skip if increment Data Memory is zero with result in ACC	1[Note]	None
SDZA [m]	Skip if decrement Data Memory is zero with result in ACC	1[Note]	None
CALL addr	Subroutine call	2	None
RET	Return from subroutine	2	None
RET A,x	Return from subroutine and load immediate data to ACC	2	None
RETI	Return from interrupt	2	None
Table Read Operation			
TABRD [m]	Read table (specific page) to TBLH and Data Memory	2[Note]	None
TABRDC [m]	Read table (current page) to TBLH and Data Memory	2[Note]	None
TABRDL [m]	Read table (last page) to TBLH and Data Memory	2[Note]	None
Miscellaneous			
NOP	No operation	1	None
CLR [m]	Clear Data Memory	1[Note]	None
SET [m]	Set Data Memory	1[Note]	None
CLR WDT	Clear Watchdog Timer	1	TO, PDF
CLR WDT1	Pre-clear Watchdog Timer	1	TO, PDF
CLR WDT2	Pre-clear Watchdog Timer	1	TO, PDF
SWAP [m]	Swap nibbles of Data Memory	1[Note]	None
SWAPA [m]	Swap nibbles of Data Memory with result in ACC	1	None
HALT	Enter power down mode	1	TO, PDF

Note: 1. For skip instructions, if the result of the comparison involves a skip then up to two cycles are required, if no skip takes place only one cycle is required.
2. Any instruction which changes the contents of the PCL will also require 2 cycles for execution.
3. For the "CLR WDT1" and "CLR WDT2" instructions the TO and PDF flags may be affected by the execution status. The TO and PDF flags are cleared after both "CLR WDT1" and "CLR WDT2" instructions are consecutively executed. Otherwise the TO and PDF flags remain unchanged.

Instruction Definition

ADC A,[m]	Add Data Memory to ACC with Carry
Description	The contents of the specified Data Memory, Accumulator and the carry flag are added. The result is stored in the Accumulator.
Operation	ACC ← ACC + [m] + C
Affected flag(s)	OV, Z, AC, C
ADCM A,[m]	Add ACC to Data Memory with Carry
Description	The contents of the specified Data Memory, Accumulator and the carry flag are added. The result is stored in the specified Data Memory.
Operation	[m] ← ACC + [m] + C
Affected flag(s)	OV, Z, AC, C
ADD A,[m]	Add Data Memory to ACC
Description	The contents of the specified Data Memory and the Accumulator are added. The result is stored in the Accumulator.
Operation	ACC ← ACC + [m]
Affected flag(s)	OV, Z, AC, C
ADD A,x	Add immediate data to ACC
Description	The contents of the Accumulator and the specified immediate data are added. The result is stored in the Accumulator.
Operation	ACC ← ACC + x
Affected flag(s)	OV, Z, AC, C
ADDM A,[m]	Add ACC to Data Memory
Description	The contents of the specified Data Memory and the Accumulator are added. The result is stored in the specified Data Memory.
Operation	[m] ← ACC + [m]
Affected flag(s)	OV, Z, AC, C
AND A,[m]	Logical AND Data Memory to ACC
Description	Data in the Accumulator and the specified Data Memory perform a bitwise logical AND operation. The result is stored in the Accumulator.
Operation	ACC ← ACC ″AND″ [m]
Affected flag(s)	Z
AND A,x	Logical AND immediate data to ACC
Description	Data in the Accumulator and the specified immediate data perform a bit wise logical AND operation. The result is stored in the Accumulator.
Operation	ACC ← ACC ″AND″ x
Affected flag(s)	Z
ANDM A,[m]	Logical AND ACC to Data Memory
Description	Data in the specified Data Memory and the Accumulator perform a bitwise logical AND operation. The result is stored in the Data Memory.
Operation	[m] ← ACC ″AND″ [m]
Affected flag(s)	Z

CALL addr	Subroutine call
Description	Unconditionally calls a subroutine at the specified address. The Program Counter then increments by 1 to obtain the address of the next instruction which is then pushed onto the stack. The specified address is then loaded and the program continues execution from this new address. As this instruction requires an additional operation, it is a two cycle instruction.
Operation	Stack ← Program Counter + 1 Program Counter ← addr
Affected flag(s)	None
CLR [m]	Clear Data Memory
Description	Each bit of the specified Data Memory is cleared to 0.
Operation	[m] ← 00H
Affected flag(s)	None
CLR [m].i	Clear bit of Data Memory
Description	Bit i of the specified Data Memory is cleared to 0.
Operation	[m].i ← 0
Affected flag(s)	None
CLR WDT	Clear Watchdog Timer
Description	The TO, PDF flags and the WDT are all cleared.
Operation	WDT cleared TO ← 0 PDF ← 0
Affected flag(s)	TO, PDF
CLR WDT1	Pre-clear Watchdog Timer
Description	The TO, PDF flags and the WDT are all cleared. Note that this instruction works in conjunction with CLR WDT2 and must be executed alternately with CLR WDT2 to have effect. Repetitively executing this instruction without alternately executing CLR WDT2 will have no effect.
Operation	WDT cleared TO ← 0 PDF ← 0
Affected flag(s)	TO, PDF
CLR WDT2	Pre-clear Watchdog Timer
Description	The TO, PDF flags and the WDT are all cleared. Note that this instruction works in conjunction with CLR WDT1 and must be executed alternately with CLR WDT1 to have effect. Repetitively executing this instruction without alternately executing CLR WDT1 will have no effect.
Operation	WDT cleared TO ← 0 PDF ← 0
Affected flag(s)	TO, PDF
CPL [m]	Complement Data Memory
Description	Each bit of the specified Data Memory is logically complemented (1′s complement). Bits which previously contained a 1 are changed to 0 and vice versa.
Operation	[m] ← $\overline{[m]}$
Affected flag(s)	Z

CPLA [m] Complement Data Memory with result in ACC

Description: Each bit of the specified Data Memory is logically complemented (1′s complement). Bits which previously contained a 1 are changed to 0 and vice versa. The complemented result is stored in the Accumulator and the contents of the Data Memory remain unchanged.

Operation: ACC ← $\overline{[m]}$

Affected flag(s): Z

DAA [m] Decimal-Adjust ACC for addition with result in Data Memory

Description: Convert the contents of the Accumulator value to a BCD (Binary Coded Decimal) value resulting from the previous addition of two BCD variables. If the low nibble is greater than 9 or if AC flag is set, then a value of 6 will be added to the low nibble. Otherwise the low nibble remains unchanged. If the high nibble is greater than 9 or if the C flag is set, then a value of 6 will be added to the high nibble. Essentially, the decimal conversion is performed by adding 00H, 06H, 60H or 66H depending on the Accumulator and flag conditions. Only the C flag may be affected by this instruction which indicates that if the original BCD sum is greater than 100, it allows multiple precision decimal addition.

Operation:
[m] ← ACC + 00H or
[m] ← ACC + 06H or
[m] ← ACC + 60H or
[m] ← ACC + 66H

Affected flag(s): C

DEC [m] Decrement Data Memory

Description: Data in the specified Data Memory is decremented by 1.

Operation: [m] ← [m] − 1

Affected flag(s): Z

DECA [m] Decrement Data Memory with result in ACC

Description: Data in the specified Data Memory is decremented by 1. The result is stored in the Accumulator. The contents of the Data Memory remain unchanged.

Operation: ACC ← [m] − 1

Affected flag(s): Z

HALT Enter power down mode

Description: This instruction stops the program execution and turns off the system clock. The contents of the Data Memory and registers are retained. The WDT and prescaler are cleared. The power down flag PDF is set and the WDT time-out flag TO is cleared.

Operation:
TO ← 0
PDF ← 1

Affected flag(s): TO, PDF

INC [m] Increment Data Memory

Description: Data in the specified Data Memory is incremented by 1.

Operation: [m] ← [m] + 1

Affected flag(s): Z

INCA [m] Increment Data Memory with result in ACC

Description: Data in the specified Data Memory is incremented by 1. The result is stored in the Accumulator. The contents of the Data Memory remain unchanged.

Operation: ACC ← [m] + 1

Affected flag(s): Z

JMP addr	Jump unconditionally
Description	The contents of the Program Counter are replaced with the specified address. Program execution then continues from this new address. As this requires the insertion of a dummy instruction while the new address is loaded, it is a two cycle instruction.
Operation	Program Counter ← addr
Affected flag(s)	None
MOV A,[m]	Move Data Memory to ACC
Description	The contents of the specified Data Memory are copied to the Accumulator.
Operation	ACC ← [m]
Affected flag(s)	None
MOV A,x	Move immediate data to ACC
Description	The immediate data specified is loaded into the Accumulator.
Operation	ACC ← x
Affected flag(s)	None
MOV [m],A	Move ACC to Data Memory
Description	The contents of the Accumulator are copied to the specified Data Memory.
Operation	[m] ← ACC
Affected flag(s)	None
NOP	No operation
Description	No operation is performed. Execution continues with the next instruction.
Operation	No operation
Affected flag(s)	None
OR A,[m]	Logical OR Data Memory to ACC
Description	Data in the Accumulator and the specified Data Memory perform a bitwise logical OR operation. The result is stored in the Accumulator.
Operation	ACC ← ACC ″OR″ [m]
Affected flag(s)	Z
OR A,x	Logical OR immediate data to ACC
Description	Data in the Accumulator and the specified immediate data perform a bitwise logical OR operation. The result is stored in the Accumulator.
Operation	ACC ← ACC ″OR″ x
Affected flag(s)	Z
ORM A,[m]	Logical OR ACC to Data Memory
Description	Data in the specified Data Memory and the Accumulator perform a bitwise logical OR operation. The result is stored in the Data Memory.
Operation	[m] ← ACC ″OR″ [m]
Affected flag(s)	Z
RET	Return from subroutine
Description	The Program Counter is restored from the stack. Program execution continues at the restored address.
Operation	Program Counter ← Stack
Affected flag(s)	None

RET A,x Return from subroutine and load immediate data to ACC

Description: The Program Counter is restored from the stack and the Accumulator loaded with the specified immediate data. Program execution continues at the restored address.

Operation:
Program Counter ← Stack
ACC ← x

Affected flag(s): None

RETI Return from interrupt

Description: The Program Counter is restored from the stack and the interrupts are re-enabled by setting the EMI bit. EMI is the master interrupt global enable bit. If an interrupt was pending when the RETI instruction is executed, the pending Interrupt routine will be processed before returning to the main program.

Operation:
Program Counter ← Stack
EMI ← 1

Affected flag(s): None

RL [m] Rotate Data Memory left

Description: The contents of the specified Data Memory are rotated left by 1 bit with bit 7 rotated into bit 0.

Operation:
[m].(i+1) ← [m].i; (i=0~6)
[m].0 ← [m].7

Affected flag(s): None

RLA [m] Rotate Data Memory left with result in ACC

Description: The contents of the specified Data Memory are rotated left by 1 bit with bit 7 rotated into bit 0. The rotated result is stored in the Accumulator and the contents of the Data Memory remain unchanged.

Operation:
ACC.(i+1) ← [m].i; (i=0~6)
ACC.0 ← [m].7

Affected flag(s): None

RLC [m] Rotate Data Memory left through Carry

Description: The contents of the specified Data Memory and the carry flag are rotated left by 1 bit. Bit 7 replaces the Carry bit and the original carry flag is rotated into bit 0.

Operation:
[m].(i+1) ← [m].i; (i=0~6)
[m].0 ← C
C ← [m].7

Affected flag(s): C

RLCA [m] Rotate Data Memory left through Carry with result in ACC

Description: Data in the specified Data Memory and the carry flag are rotated left by 1 bit. Bit 7 replaces the Carry bit and the original carry flag is rotated into the bit 0. The rotated result is stored in the Accumulator and the contents of the Data Memory remain unchanged.

Operation:
ACC.(i+1) ← [m].i; (i=0~6)
ACC.0 ← C
C ← [m].7

Affected flag(s): C

RR [m] Rotate Data Memory right

Description: The contents of the specified Data Memory are rotated right by 1 bit with bit 0 rotated into bit 7.

Operation:
[m].i ← [m].(i+1); (i=0~6)
[m].7 ← [m].0

Affected flag(s): None

RRA [m] Rotate Data Memory right with result in ACC

Description: Data in the specified Data Memory is rotated right by 1 bit with bit 0 rotated into bit 7. The rotated result is stored in the Accumulator and the contents of the Data Memory remain unchanged.

Operation: ACC.i ← [m].(i+1); (i=0~6)
ACC.7 ← [m].0

Affected flag(s): None

RRC [m] Rotate Data Memory right through Carry

Description: The contents of the specified Data Memory and the carry flag are rotated right by 1 bit. Bit 0 replaces the Carry bit and the original carry flag is rotated into bit 7.

Operation: [m].i ← [m].(i+1); (i=0~6)
[m].7 ← C
C ← [m].0

Affected flag(s): C

RRCA [m] Rotate Data Memory right through Carry with result in ACC

Description: Data in the specified Data Memory and the carry flag are rotated right by 1 bit. Bit 0 replaces the Carry bit and the original carry flag is rotated into bit 7. The rotated result is stored in the Accumulator and the contents of the Data Memory remain unchanged.

Operation: ACC.i ← [m].(i+1); (i=0~6)
ACC.7 ← C
C ← [m].0

Affected flag(s): C

SBC A, [m] Subtract Data Memory from ACC with Carry

Description: The contents of the specified Data Memory and the complement of the carry flag are subtracted from the Accumulator. The result is stored in the Accumulator. Note that if the result of subtraction is negative, the C flag will be cleared to 0, otherwise if the result is positive or zero, the C flag will be set to 1.

Operation: ACC ← ACC − [m] − $\overline{C}$

Affected flag(s): OV, Z, AC, C

SBCM A, [m] Subtract Data Memory from ACC with Carry and result in Data Memory

Description: The contents of the specified Data Memory and the complement of the carry flag are subtracted from the Accumulator. The result is stored in the Data Memory. Note that if the result of subtraction is negative, the C flag will be cleared to 0, otherwise if the result is positive or zero, the C flag will be set to 1.

Operation: [m] ← ACC − [m] − $\overline{C}$

Affected flag(s): OV, Z, AC, C

SDZ [m] Skip if decrement Data Memory is 0

Description: The contents of the specified Data Memory are first decremented by 1. If the result is 0 the following instruction is skipped. As this requires the insertion of a dummy instruction while the next instruction is fetched, it is a two cycle instruction. If the result is not 0 the program proceeds with the following instruction.

Operation: [m] ← [m] − 1
Skip if [m]=0

Affected flag(s): None

SDZA [m]	Skip if decrement Data Memory is zero with result in ACC
Description	The contents of the specified Data Memory are first decremented by 1. If the result is 0, the following instruction is skipped. The result is stored in the Accumulator but the specified Data Memory contents remain unchanged. As this requires the insertion of a dummy instruction while the next instruction is fetched, it is a two cycle instruction. If the result is not 0, the program proceeds with the following instruction.
Operation	ACC ← [m] − 1 Skip if ACC=0
Affected flag(s)	None
SET [m]	Set Data Memory
Description	Each bit of the specified Data Memory is set to 1.
Operation	[m] ← FFH
Affected flag(s)	None
SET [m].i	Set bit of Data Memory
Description	Bit i of the specified Data Memory is set to 1.
Operation	[m].i ← 1
Affected flag(s)	None
SIZ [m]	Skip if increment Data Memory is 0
Description	The contents of the specified Data Memory are first incremented by 1. If the result is 0, the following instruction is skipped. As this requires the insertion of a dummy instruction while the next instruction is fetched, it is a two cycle instruction. If the result is not 0 the program proceeds with the following instruction.
Operation	[m] ← [m] + 1 Skip if [m]=0
Affected flag(s)	None
SIZA [m]	Skip if increment Data Memory is zero with result in ACC
Description	The contents of the specified Data Memory are first incremented by 1. If the result is 0, the following instruction is skipped. The result is stored in the Accumulator but the specified Data Memory contents remain unchanged. As this requires the insertion of a dummy instruction while the next instruction is fetched, it is a two cycle instruction. If the result is not 0 the program proceeds with the following instruction.
Operation	ACC ← [m] + 1 Skip if ACC=0
Affected flag(s)	None
SNZ [m].i	Skip if bit i of Data Memory is not 0
Description	If bit i of the specified Data Memory is not 0, the following instruction is skipped. As this requires the insertion of a dummy instruction while the next instruction is fetched, it is a two cycle instruction. If the result is 0 the program proceeds with the following instruction.
Operation	Skip if [m].i ≠ 0
Affected flag(s)	None
SUB A,[m]	Subtract Data Memory from ACC
Description	The specified Data Memory is subtracted from the contents of the Accumulator. The result is stored in the Accumulator. Note that if the result of subtraction is negative, the C flag will be cleared to 0, otherwise if the result is positive or zero, the C flag will be set to 1.
Operation	ACC ← ACC − [m]
Affected flag(s)	OV, Z, AC, C

SUBM A,[m] Subtract Data Memory from ACC with result in Data Memory

Description: The specified Data Memory is subtracted from the contents of the Accumulator. The result is stored in the Data Memory. Note that if the result of subtraction is negative, the C flag will be cleared to 0, otherwise if the result is positive or zero, the C flag will be set to 1.

Operation: [m] ← ACC − [m]

Affected flag(s): OV, Z, AC, C

SUB A,x Subtract immediate data from ACC

Description: The immediate data specified by the code is subtracted from the contents of the Accumulator. The result is stored in the Accumulator. Note that if the result of subtraction is negative, the C flag will be cleared to 0, otherwise if the result is positive or zero, the C flag will be set to 1.

Operation: ACC ← ACC − x

Affected flag(s): OV, Z, AC, C

SWAP [m] Swap nibbles of Data Memory

Description: The low-order and high-order nibbles of the specified Data Memory are interchanged.

Operation: [m].3~[m].0 ↔ [m].7~[m].4

Affected flag(s): None

SWAPA [m] Swap nibbles of Data Memory with result in ACC

Description: The low-order and high-order nibbles of the specified Data Memory are interchanged. The result is stored in the Accumulator. The contents of the Data Memory remain unchanged.

Operation: ACC.3~ACC.0 ← [m].7~[m].4
ACC.7~ACC.4 ← [m].3~[m].0

Affected flag(s): None

SZ [m] Skip if Data Memory is 0

Description: If the contents of the specified Data Memory is 0, the following instruction is skipped. As this requires the insertion of a dummy instruction while the next instruction is fetched, it is a two cycle instruction. If the result is not 0 the program proceeds with the following instruction.

Operation: Skip if [m]=0

Affected flag(s): None

SZA [m] Skip if Data Memory is 0 with data movement to ACC

Description: The contents of the specified Data Memory are copied to the Accumulator. If the value is zero, the following instruction is skipped. As this requires the insertion of a dummy instruction while the next instruction is fetched, it is a two cycle instruction. If the result is not 0 the program proceeds with the following instruction.

Operation: ACC ← [m]
Skip if [m]=0

Affected flag(s): None

SZ [m].i Skip if bit i of Data Memory is 0

Description: If bit i of the specified Data Memory is 0, the following instruction is skipped. As this requires the insertion of a dummy instruction while the next instruction is fetched, it is a two cycle instruction. If the result is not 0, the program proceeds with the following instruction.

Operation: Skip if [m].i=0

Affected flag(s): None

TABRD [m]	Read table (specific page) to TBLH and Data Memory
Description	The low byte of the program code (specific page) addressed by the table pointer pair (TBHP and TBLP) is moved to the specified Data Memory and the high byte moved to TBLH.
Operation	[m] ← program code (low byte) TBLH ← program code (high byte)
Affected flag(s)	None

TABRDC [m]	Read table (current page) to TBLH and Data Memory
Description	The low byte of the program code (current page) addressed by the table pointer (TBLP) is moved to the specified Data Memory and the high byte moved to TBLH.
Operation	[m] ← program code (low byte) TBLH ← program code (high byte)
Affected flag(s)	None

TABRDL [m]	Read table (last page) to TBLH and Data Memory
Description	The low byte of the program code (last page) addressed by the table pointer (TBLP) is moved to the specified Data Memory and the high byte moved to TBLH.
Operation	[m] ← program code (low byte) TBLH ← program code (high byte)
Affected flag(s)	None

XOR A,[m]	Logical XOR Data Memory to ACC
Description	Data in the Accumulator and the specified Data Memory perform a bitwise logical XOR operation. The result is stored in the Accumulator.
Operation	ACC ← ACC ″XOR″ [m]
Affected flag(s)	Z

XORM A,[m]	Logical XOR ACC to Data Memory
Description	Data in the specified Data Memory and the Accumulator perform a bitwise logical XOR operation. The result is stored in the Data Memory.
Operation	[m] ← ACC ″XOR″ [m]
Affected flag(s)	Z

XOR A,x	Logical XOR immediate data to ACC
Description	Data in the Accumulator and the specified immediate data perform a bitwise logical XOR operation. The result is stored in the Accumulator.
Operation	ACC ← ACC ″XOR″ x
Affected flag(s)	Z

Package Information

Note that the package information provided here is for consultation purposes only. As this information may be updated at regular intervals users are reminded to consult the Holtek website for the latest version of the Package/Carton Information.

Additional supplementary information with regard to packaging is listed below. Click on the relevant section to be transferred to the relevant website page.

- Further Package Information (include Outline Dimensions, Product Tape and Reel Specifications)
- Packing Meterials Information
- Carton information

16-pin NSOP (150mil) Outline Dimensions

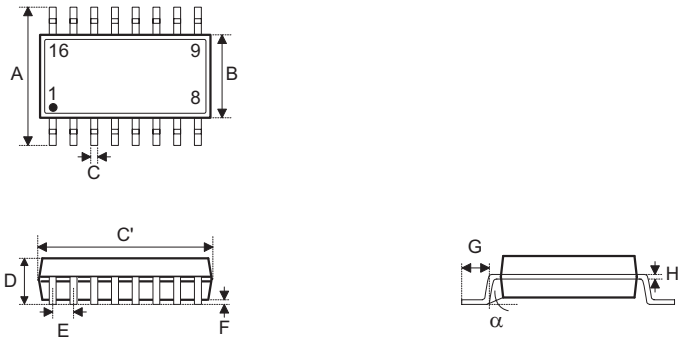

Symbol	Dimensions in inch		
	Min.	Nom.	Max.
A	—	0.236 BSC	—
B	—	0.154 BSC	—
C	0.012	—	0.020
C’	—	0.390 BSC	—
D	—	—	0.069
E	—	0.050 BSC	—
F	0.004	—	0.010
G	0.016	—	0.050
H	0.004	—	0.010
α	0°	—	8°

Symbol	Dimensions in mm		
	Min.	Nom.	Max.
A	—	6 BSC	—
B	—	3.9 BSC	—
C	0.31	—	0.51
C’	—	9.9 BSC	—
D	—	—	1.75
E	—	1.27 BSC	—
F	0.10	—	0.25
G	0.40	—	1.27
H	0.10	—	0.25
α	0°	—	8°

20-pin NSOP (150mil) Outline Dimensions

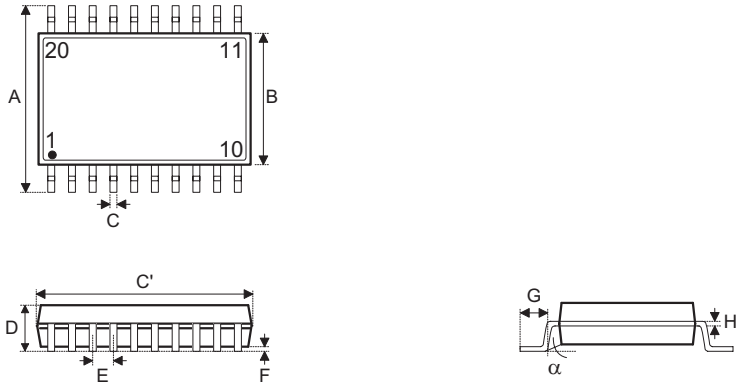

Symbol	Dimensions in inch		
	Min.	Nom.	Max.
A	0.228	0.236	0.244
B	0.146	0.154	0.161
C	0.009	—	0.012
C’	0.382	0.390	0.398
D	—	—	0.069
E	—	0.032 BSC	—
F	0.002	—	0.009
G	0.020	—	0.031
H	0.008	—	0.010
α	0°	—	8°

Symbol	Dimensions in mm		
	Min.	Nom.	Max.
A	5.80	6.00	6.20
B	3.70	3.90	4.10
C	0.23	—	0.30
C’	9.70	9.90	10.10
D	—	—	1.75
E	—	0.80 BSC	—
F	0.05	—	0.23
G	0.50	—	0.80
H	0.21	—	0.25
α	0°	—	8°

Copyright© 2018 by HOLTEK SEMICONDUCTOR INC.

The information appearing in this Data Sheet is believed to be accurate at the time of publication. However, Holtek assumes no responsibility arising from the use of the specifications described. The applications mentioned herein are used solely for the purpose of illustration and Holtek makes no warranty or representation that such applications will be suitable without further modification, nor recommends the use of its products for application that may present a risk to human life due to malfunction or otherwise. Holtek's products are not authorized for use as critical components in life support devices or systems. Holtek reserves the right to alter its products without prior notification. For the most up-to-date information, please visit our web site at http://www.holtek.com/en/.